General Description

The SIC9521/SIC9522 are high precision Non-Isolation LED drivers for buck LED lighting application. They are suited AC 85V-265V non-isolated LED driver supply Typical ± 5% Output current accuracy achieved by built-in high precision sampling and compensation circuit. Integrated 500V power MOSFET, without secondary feedback circuit, also need not compensation circuit, the drivers have good performance with very simple peripheral circuits.
The SIC9521/SIC9522 have multi-protection functions which largely enhance the safety and reliability of the system, including VCC over-voltage protection, VCC UVLO, short-circuit protection, LED open protection, cycle-by-cycle current limit and over-temperature protection.
The SIC9521/SIC9522 are available in compact TO-94 package.

Features

- Simple peripheral circuits
- Integrated 500V power MOSFET
- Typical ± 5% Output current accuracy
- Ultra-low operating current, without auxiliary winding detection and power supply
- Continuous inductor current mode
- LED open-circuit voltage adjusted by an external resistor
- Output open circuit protection
- Sampling resistor open circuit protection
- Over temperature protection

Typical Application

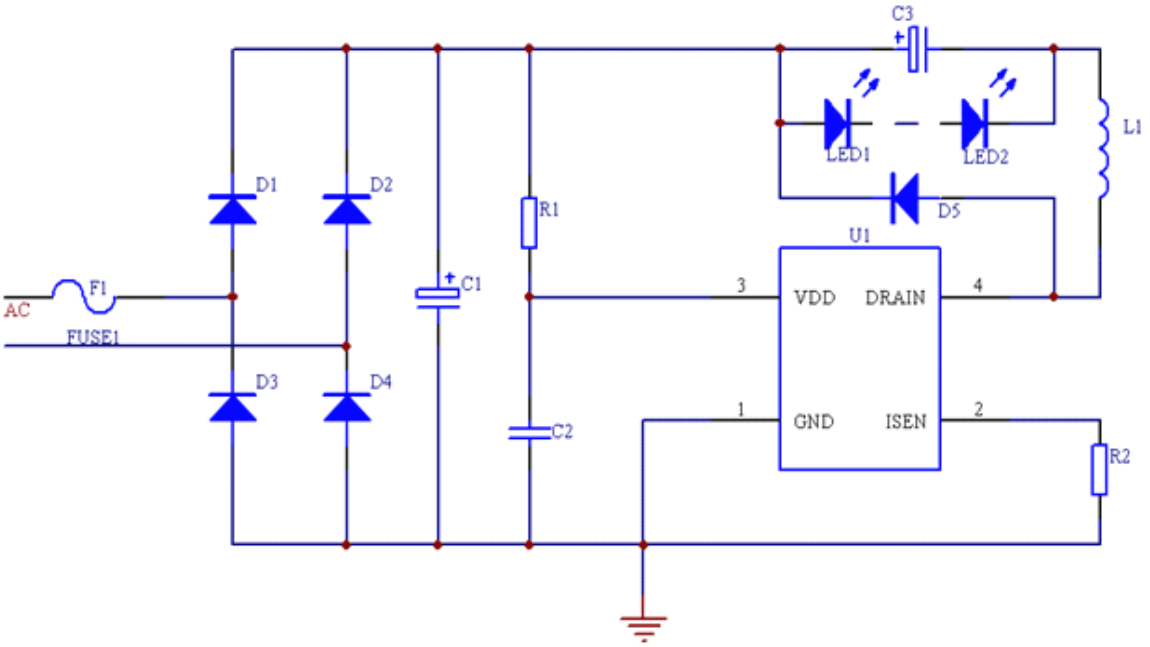

Recommended Operation Conditions

Products	Parameters	Symbol	Range	Unit
SIC9521	Input Voltage 220V±20%	$I_{LED}1$	80@V_{OUT}=80V	mA
	Input voltage 220V±20%	$I_{LED}2$	150@V_{OUT}=36V	mA
SIC9522	Input Voltage 220V±20%	$I_{LED}1$	155@VOUT=80V	mA
	Input voltage 220V±20%	$I_{LED}2$	255@VOUT=36V	mA
All Devices	Minimum LED loading voltage	V_{MIN}	>15	V

Ordering Information

Part Number	Package	Package Method	Marking
SIC9521	TO-94	Bulk	SI 9521 XXXXX
SIC9522	TO-94	Bulk	SI 9522 XXXXXX

Pin Assignment

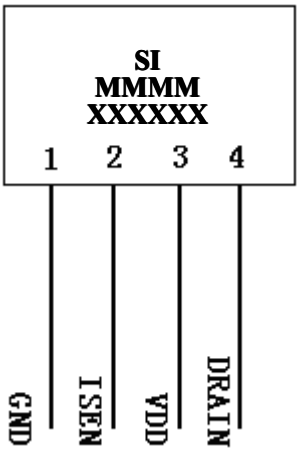

"Si"-Logo of SI Semiconductors
MMMM--Part Number (4 digits);
XXXXX--Date Code (6 digits)

Pin Description

Pin	Pin Name	Description
1	GND	Ground
2	ISEN	Current Sense Pin, external resistor to ground
3	VDD	Power Supply Pin
4	DRAIN	Drain of Internal MOSFET

Absolute Maximum Ratings

Parameters	Symbol	Range	Unit
Maximum Current on VDD Pin	I_{DD_MAX}	10	mA
Voltage on DRAIN Pin	V_{DRN}	-0.3～500	V
Voltage on ISEN Pin	V_{ISEN}	-0.3～6	V
Maximum Operating Current	I_{DDMAX}	5	mA
Maximum Power Dissipation(Ta=25℃)	Ptot	0.40	W
Thermal Resistance Junction-ambient	Rthj-a	156	℃/W
Operating Junction Temperature	T_J	-40-150	℃
Storage Temperature Range	T_{STG}	-55-150	℃
ESD		2,000	V

Note：The Performance and reliability of the product will not be guaranteed in case of exceeding the limit parameter range. Exceeding of the limit parameter range should be avoid during practical using.

Electronic Characteristics (V_{DD}=15V，Tc= 25℃)

Parameter		Symbol	Test Conditions	Min	Typ	Max	Unit
V_{CC} Clamp Voltage		V_{DD_CLAMP}	1mA		16.8		V
V_{CC} Turn on Threshold		V_{DD_ON}	VDD Rising		14		V
V_{CC} Turn off Threshold		V_{DD_UVLO}	VDD Falling		9		V
V_{CC} Start up Current		I_{ST}	VDD= V_{DD_ON}-1V		120	180	uA
V_{CC} Operating Current		I_{OP}	F =70KHZ		100	150	uA
Threshold Voltage for Peak Current Limit		V_{ISEN_TH}		380	400	420	mV
Threshold Voltage for Peak Current Limit When Out Short		V_{ISEN_SHORT}	Out Short		200		mV
Leading Edge Blanking Time for Current Sense		T_{LEB}			350		ns
Switch Off Delay Time		T_{DELAY}			200		ns
Minimum OFF Time		T_{OFF_MIN}			4.5		us
Maximum OFF Time		T_{OFF_MAX}			240		us
Maximum On Time		T_{ON_MAX}			40		us
SIC9521	MOSFET $R_{DS(ON)}$	$R_{DS(ON)}$	V_{GS}=15V/I_{DS}=0.2A			26	Ω
SIC9522						20	
Breakdown Voltage for internal MOSFET		BV_{DSS}	V_{GS}=0V/I_{DS}=250uA	500			V
Drain Leakage Current for internal MOSFET		I_{DSS}	V_{GS}=0V/V_{DS}=500V			1	uA
Thermal Regulation Temperature		T_{REG}				150	℃

Functional Block Diagram

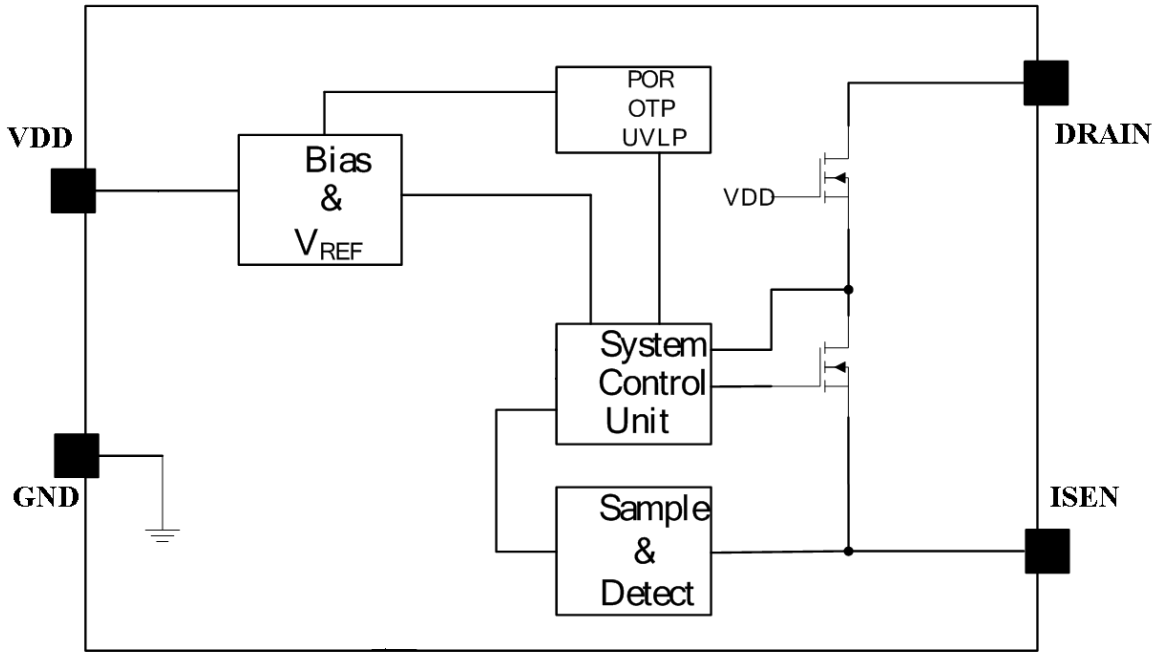

Applications Information

Functional Description

The SIC9521/SIC9522 are high-precision buck section switch dimming drivers for 86Vac-265Vac universal input non-isolated buck constant current LED lighting Application. Operation in critical continuous mode, the power MOSFET switching loss is reduced and the inductor is fully utilized. 500V power MOSFET is integrated, which can significantly simplify the design of LED lighting system. Works in the critical conduction mode can achieve excellent line and load regulation, high efficiency and low BOM cost.

Start Up

When system turn on, the capacitor connected to VDD pin is charged up, while the VDD up to threshold voltage, the internal circuits start working. The SIC9521/SIC9522 integrate a 17 zener diode to clamp the VDD voltage. Due to the ultra-low operating current, the auxiliary winding is not need to supply the IC.

Constant Current Control

The SIC9521/SIC9522 controls the output current from the information of the current sensing resistor. The output LED mean current can be calculated as:

$$I_{LED} = \frac{V_{ISEN}}{R_{ISEN}} (A)$$

Where
V_{ISEN} –400mV typically;
R_{ISEN} – The sensing resistor connected between ISEN and GND.
The ISEN comparator includes a 350ns leading edge blanking time.The LED output current can be calculated by the following:

$$I_{LED} = \frac{I_{PK}}{2}$$

Where, IPK is the peak current of the inductor

Inductor Selection

The SIC9521/SIC9522 works under inductor current critical conduction mode. When the power MOFET is switched on, the current in the inductor rises up from zero, the on time of the MOSFET can be calculated by the equation:

$$t_{on} = \frac{L \times I_{PK}}{V_{IN} - V_{LED}}$$

Where, L is the inductance value

VIN is the DC bus voltage after the rectifier bridge

VLED is the voltage on the LED

After the power MOSFET is switched off, the current in the inductor decreases. When the inductor current reaches zero, the power MOSFET is turned on again by IC internal logic. The off time of the MOSFET is given by:

$$t_{off} = \frac{L \times I_{PK}}{V_{LED}}$$

The inductance can be calculated by the equation:

$$L = \frac{V_{LED} \times (V_{IN} - V_{LED})}{f \times I_{PK} \times V_{IN}}$$

The f is the system switching frequency, which is proportional to the input voltage. So the minimum switching frequency is set at lowest input voltage, and the maximum switching frequency is set at highest input voltage.

The minimum and maximum off time of SIC9521/9522 is set at 4.5us and 240us, respectively.

Referring to the equation of t_{OFF} calculation, if the inductance is too small, the t_{OFF} may be smaller than the minimum off time, system will operate in discontinuous conduction mode and the output current will be smaller than the designed value. If the inductance is too large, the t_{OFF} may be larger than the maximum off time, the system will operate in continuous conduction mode and the output current will be higher than the designed value. So it is important to choose a proper inductance.

Protection Function

The SIC9521/9522 offers rich protection functions to improve the system reliability, including LED open/short protection, ISEN resistor short protection, VDD under voltage protection, thermal regulation. When the LED is open circuit, the system will trigger the over voltage protection and stop switching.

When the LED short circuit is detected, the system works at low frequency (5kHz), and the CS pin turn off threshold is reduced to 200mV. So the system power consumption is very low. At some catastrophic fault condition, such as ISEN resistor shorted or inductor saturated, the internal fast fault detection circuit will be triggered, the system stops switching immediately.

After the system enters into fault condition, the VDD voltage will decrease until it reaches the UVLO threshold, then the system will re-start again. If the fault condition is removed, the system will recover to normal operation.

Over Temperature Protection

The SIC9521/9522 integrates thermal regulation function. When the system is over temperature, the output current is gradually reduced; the output power and thermal dissipation are also reduced. The system temperature is regulated and the system reliability is improved. The thermal regulation temperature is set to 150℃ internally.

PCB Layout Guidelines

The bypass capacitor on VDD pin should be as close as possible to the VDD Pin and GND pin.

The power **ground path** for current sense should be short, and the power ground path should be separated from small signal ground path before connecting to the negative node of the bulk capacitor.

The area of main current loop should be as small as possible to reduce EMI radiation, such as the inductor, the power MOSFET, the output diode and the bus capacitor loop. However too large copper area may compromise EMI performance.

TO-94 封装机械尺寸
TO-94 MECHANICAL DATA

单位:毫米/UNIT：mm
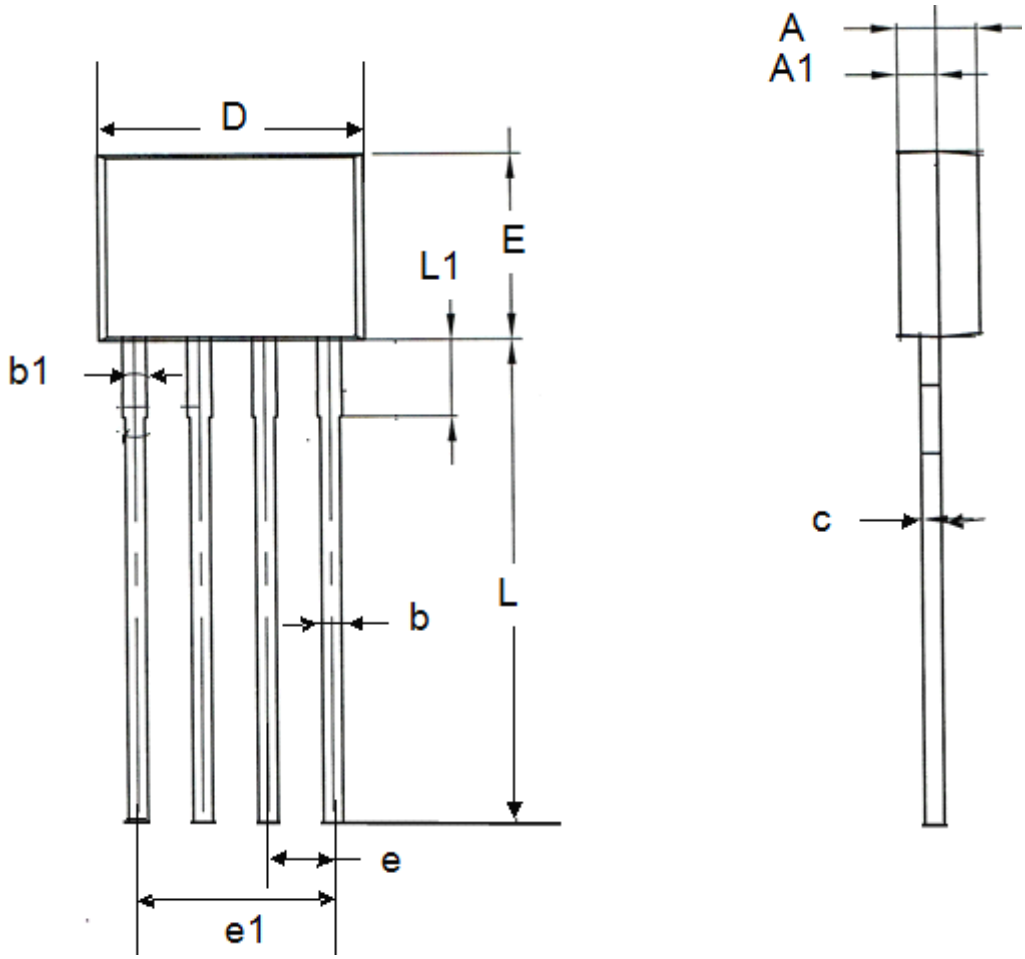
符号/SYMBOL	最小值/min	典型值/nom	最大值/max
A	1.40		1.80
A1	0.70		0.90
b	0.36		0.50
b1	0.38		0.55
c	0.36		0.51
D	4.98		5.38
E	3.45		3.75
e		1.27 TYP	
e1	3.71		3.91
L	14.00		15.30
L1	1.00		2.10