For more Hi-Fi manuals and set-up information
please visit www.hifiengine.com

A-1

SERVICE MANUAL

■ FRONT PANEL

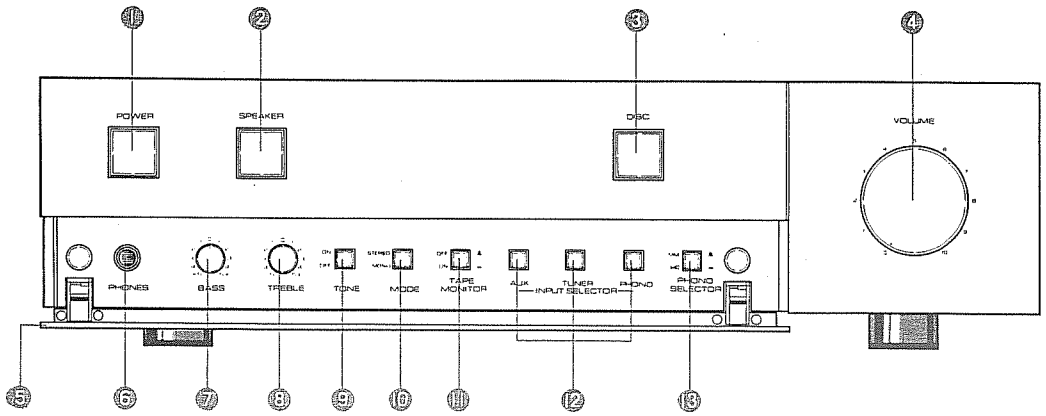

① POWER SWITCH
② SPEAKER SWITCH
③ DISC SWITCH
④ VOLUME CONTROL
⑤ SEALING PANEL
⑥ HEAD PHONE JACK
⑦ BASS CONTROL
⑧ TREBLE CONTROL
⑨ TONE SWITCH
⑩ MODE SWITCH
⑪ TAPE MONITOR SWITCH
⑫ INPUT SELECTOR SWITCH
⑬ PHONO SELECTOR SWITCH

■ REAR PANEL (GENERAL MODELS)

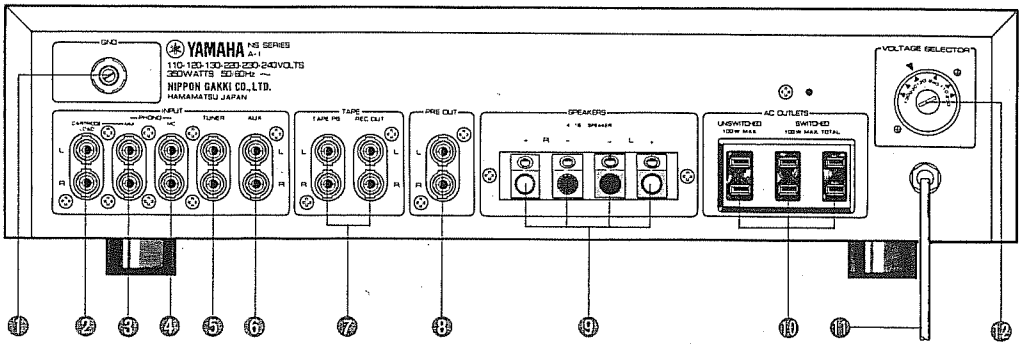

⑬ GND TERMINAL
⑭ PHONO – CARTRIDGE LOAD JACKS
⑮ PHONO – MM INPUT JACKS (for MM Cartridge)
⑯ PHONO – MC INPUT JACKS (for MC Cartridge)
⑰ TUNER INPUT JACKS
⑱ AUX INPUT JACKS
⑲ TAPE PB/REC OUT JACKS
⑳ PRE OUT JACKS
㉑ SPEAKER TERMINALS
㉒ AC OUTLETS
㉓ AC CORD
㉔ VOLTAGE SELECTOR

004356

YAMAHA
Printed in Japan 5.78, T.T 2K

CONTENTS

PACKAGE 2
SPECIFICATIONS 3
REAR PANELS 4
INTERNAL VIEW 5
DISASSEMBLY PROCEDURES 6
CIRCUIT DESCRIPTIONS 8
BLOCK DIAGRAM/LEVEL DIAGRAM 9
ADJUSTMENT 10
WIRING 11
PRINTED CIRCUIT BOARDS 12
SCHEMATIC DIAGRAM
PARTS LIST 17

PACKAGE

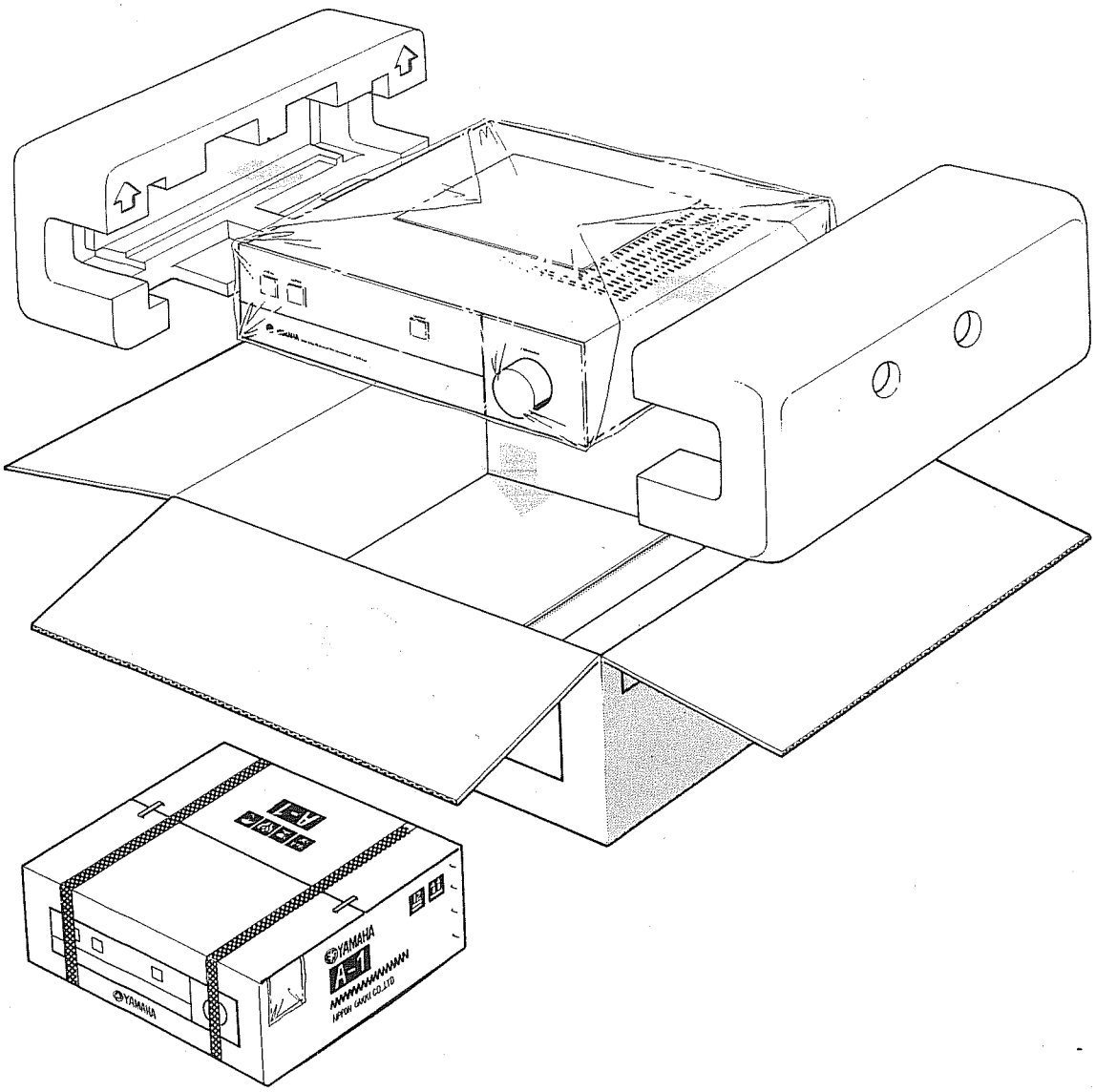

SPECIFICATIONS *(SPECIFICATIONS SUBJECT CHANGE WITHOUT NOTICE.)*

POWER OUTPUT	8Ω 0.02%	70W + 70W, (20 ~ 20KHz)
	4Ω 0.05%	80W + 80W, (20 ~ 20KHz)
	8Ω	85W + 85W, (DIN)
DAMPING FACTOR	8Ω	100 (1KHz)
PRE OUT	OUTPUT LEVEL/ IMPEDANCE	2V/600Ω
INPUT SENSITIVITY/IMPEDANCE	TUNER, AUX, TAPE	200mV/47KΩ
	PHONO MM	2.5mV/47KΩ (200pF)
	PHONO MC	60μV/10Ω
PHONO MAXIMUM INPUT	PHONO MM	230mV (0.01%, 1KHz)
	PHONO MC	6mV (0.01%, 1KHz)
TOTAL HARMONIC DISTORTION	TUNER → SP OUT	Less than 0.01%, 8Ω, 20 ~ 20KHz, (35W)
	PHONO MM → REC OUT	Less than 0.005%, 20 ~ 20KHz, (8V)
	PHONO MC → REC OUT	Less than 0.01%, 20 ~ 20KHz, (2V)
INTER MODULATION DISTORTION	TUNER → SP OUT	Less than 0.003%, (8Ω) 35W, 60Hz : 7KHz = 4 : 1
SIGNAL/NOISE	PHONO MC (A NETWORK)	70dB
	PHONO MM (A NETWORK)	85dB
	TUN, AUX, TAPE — TONE OFF	112dB
	TAPE — TONE ON	105dB
RESIDUAL NOISE	DISC ON, TONE OFF	Less than 50μV
FREQUENCY RESPONCE	TUN, AUX, TAPE — SP OUT (8Ω)	TONE OFF: 10Hz ± 0; 100KHz 0 $^{+0}_{-2}$dB; 20 ~ 20KHz $^{+0}_{-2}$dB
		TONE ON: 10Hz – 4 ± 0.5dB; 100KHz 0 $^{+0}_{-2}$dB; 20 ~ 20KHz $^{+0}_{-2}$dB
	RIAA DEVIATION	20 ~ 20KHz 0 ±0.2dB
TONE CONTROL		BASS : 20Hz ± 10dB (TURN OVER FREQ → 350Hz)
		TREBLE : 20KHz ± 10dB (TURN OVER FREQ → 3.5KHz)
CHANNEL SEPARATION	TUNER → SP OUT	70dB (1KHz,5.1KΩ)
	PHONO MM → SP OUT	75dB (1KHz,5.1KΩ) VOL –30dB
	PHONO MC → SP OUT	75dB (1KHz,PHONO short) VOL –30dB
POWER BAND WIDTH	8Ω, 35W, 0.03%	10 ~ 50KHz
N.D.C.R	PHONO MM → SP OUT	6mW ~ 70W (0.1% VOL –20dB) A NETWORK
HEAD PHONE		39mW (8Ω)
SPEAKER TERMINALS		4Ω ~ 16Ω
AC OUTLETS	SWITCHED x 2	100W, (MAX TOTAL)
	UNSWITCHED x 1	100W (MAX)
POWER SOURCE	US & Canadian Models	120V, AC60Hz
	General Model	110/120/130/220/230/240V, AC50/60Hz
	European Model	110/120/130/220/230/240V, AC50Hz
	North European Model	220V, AC50Hz
	British & Australian Models	240V, AC50Hz
DIMENSIONS		435 (W) x 117 (H) x 381 (D)
WEIGHT		15.8 kg (34 lb 13 oz)
ACCESORRYS		CARTRIDE COAD PLUG (47KΩ x 2)
		" (68KΩ x 2)
		PHONO SHORT PLUG x 2

REAR PANEL

▼US & CANADIAN MODELS

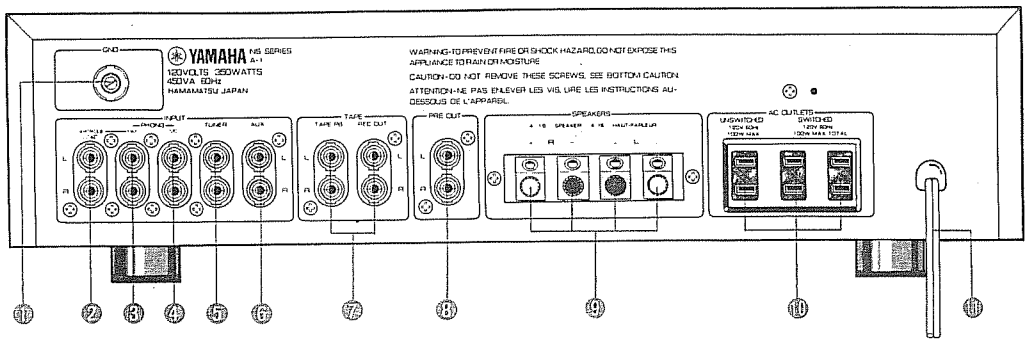

▼EUROPEAN MODEL

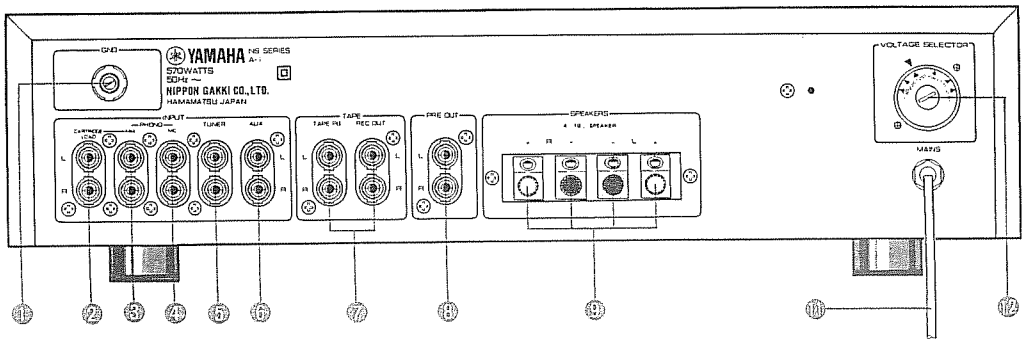

▼BRITISH & NORTH EUROPEAN MODELS

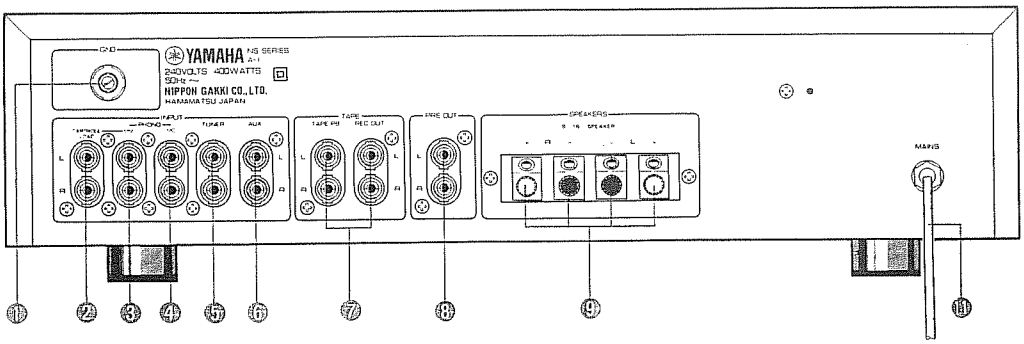

▼AUSTRALIAN MODEL

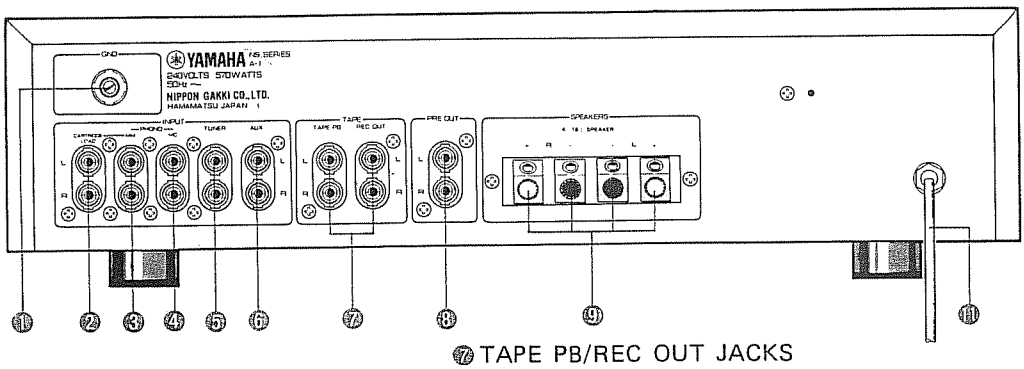

1. GND TERMINAL
2. PHONO – CARTRIDGE LOAD JACKS
3. PHONO – MM INPUT JACKS (for MM Cartridge)
4. PHONO – MC INPUT JACKS (for MC Cartridge)
5. TUNER INPUT JACKS
6. AUX INPUT JACKS
7. TAPE PB/REC OUT JACKS
8. PRE OUT JACKS
9. SPEAKER TERMINALS
10. AC OUTLETS
11. AC CORD
12. VOLTAGE SELECTOR

INTERNAL VIEW

▼TOP VIEW

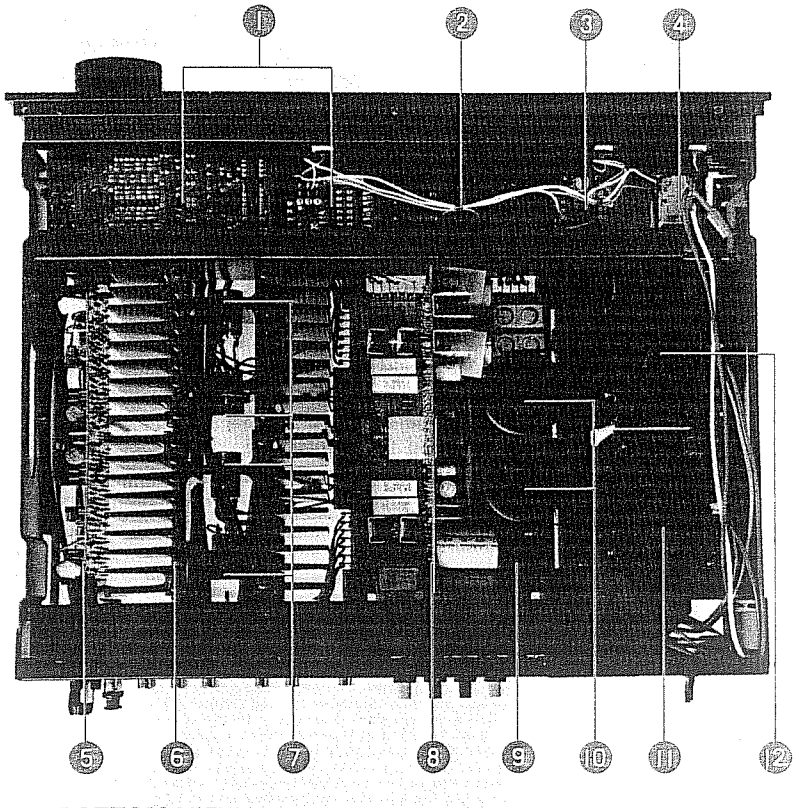

1. VR & SW CIRCUIT BOARD
2. PRE AMP CIRCUIT BOARD
3. SPEAKER SWITCH
4. POWER SWITCH
5. DRIVE CIRCUIT BOARD
6. HEAT SINK
7. POWER TRANSISTOR
8. POWER CIRCUIT BOARD
9. ELECTROLYTIC CAPACITOR CIRCUIT BOARD
10. ELECTROLYTIC CAPACITOR 18000μF/63WV
11. POWER TRANSFORMER
12. POWER TRANSFORMER

▼BOTTOM VIEW

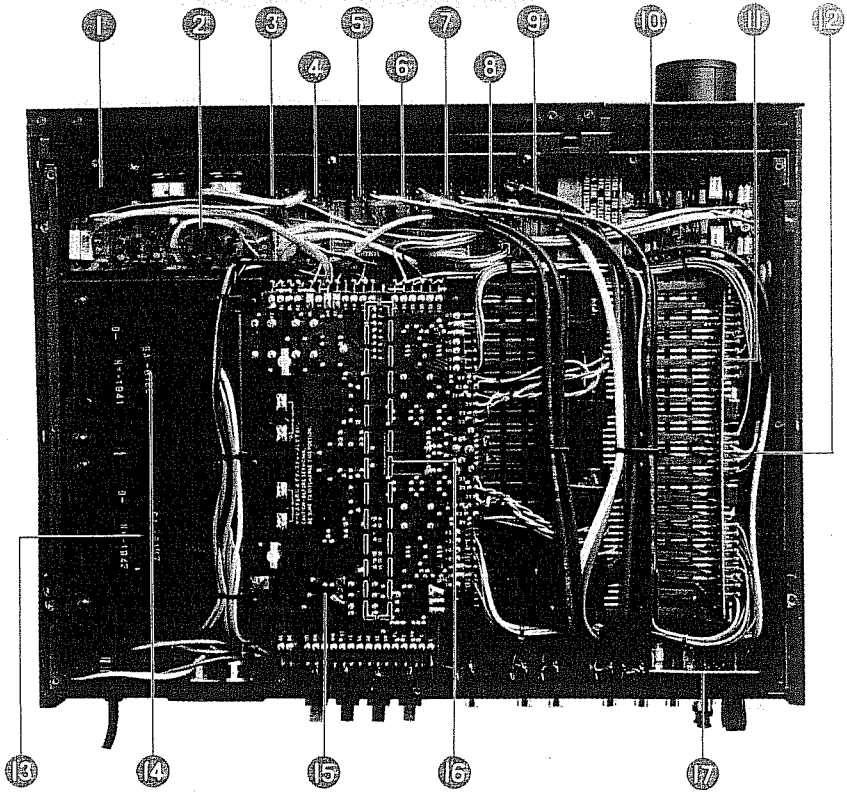

1. PHONES JACKS
2. TONE CONTROL CIRCUIT BOARD
3. TONE SWITCH
4. MODE SWITCH
5. TAPE MONITOR SWITCH
6. AUX SWITCH
7. TUNER SWITCH
8. PHONO SWITCH
9. PHONO SELECTOR SWITCH
10. PRE AMP CIRCUIT BOARD
11. DRIVE CIRCUIT BOARD
12. FET CIRCUIT BOARD
13. POWER TRANSFORMER
14. POWER TRANSFORMER
15. ELECTROLYTIC CAPACITOR CIRCUIT BOARD
16. POWER CIRCUIT BOARD
17. PIN JACK CIRCUIT BOARD

DISASSEMBLY PROCEDURES

1. Top cover removal

The top cover can be removed when the (1) to (4) screws at the rear of the unit (see photo) are removed.

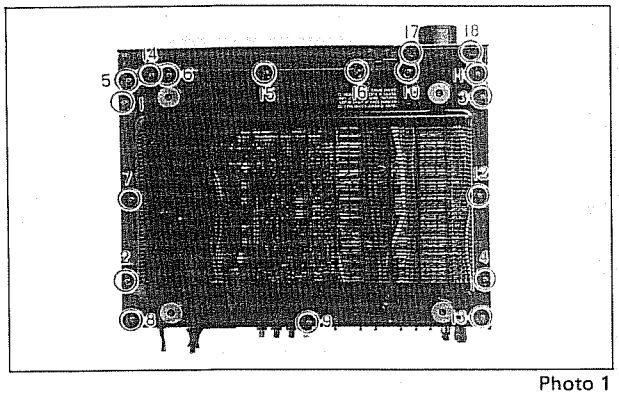

Photo 1

2. Bottom cover removal

The bottom cover can be removed when the (5) to (13) screws in Photo 1 are removed.

3. Front panel removal

a. Pull the (left channel) front part of the VOLUME knob out and remove.

b. Use a 2 mm diameter hexagonal wrench to loosen the screws of the (right channel) inside part of the VOLUME knob, pull the knob out from the shaft, and at the same time remove the nut used to mount the VOLUME knob.

c. Pull out the BASS and TREBLE knobs inside the sealing panel and remove.

d. Remove screws (14) to (18) in Photo 1.

e. Remove screws (1) to (3) in Photo 2 and pull out the front panel gently.

* Make sure that you do not break the pilot lamp lead wire connections with the DISC, SPEAKER and POWER switches.

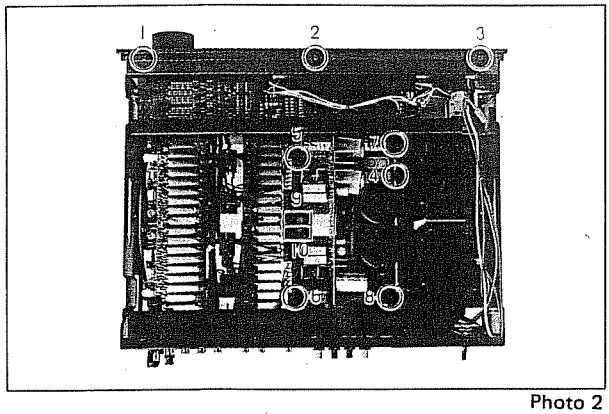

Photo 2

f. Pull out the pilot lamps of the DISC, SPEAKER and POWER switches from the holders at the rear of the switches, taking care that you do not break the lead wire connections. (See Fig. 1)

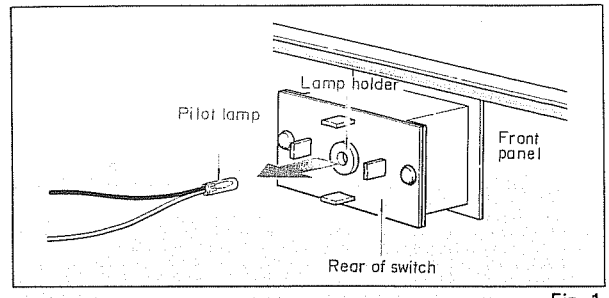

Fig. 1

4. Power printed circuit board removal

a. Remove the top cover. (Refer to Step 1.)

b. Hold the (1) and (2) holders shown in Photo 3 between small pincers and push them in the direction of the arrow to remove them. Now pull the power printed circuit board up and remove.

* When replacing the printed board, check the positions of the power printed circuit board connector pins and of the electrolytic capacitor printed circuit board.

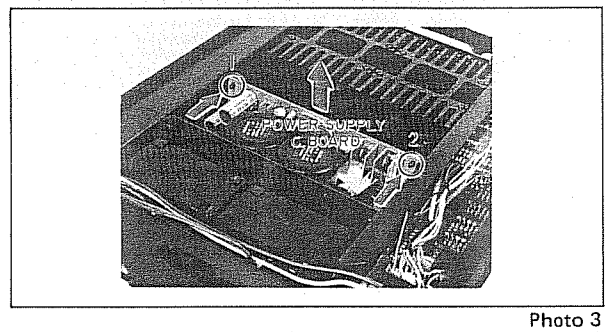

Photo 3

5. Electrolytic capacitor printed circuit board removal

a. Remove the top and bottom covers. (Refer to Steps 1 and 2.)

b. Remove the power printed circuit board. (Refer to Step 4.)

c. Detach the lead wires which are connected to the terminals on the electrolytic capacitor printed circuit board.

d. Remove screw (4) in Photo 2 and then remove the band which serves to secure the electrolytic capacitor.

* When replacing this circuit board, make sure that TR137 (9) and TR138 (10) in Photo 2 are brought into close contact with the heat sink as shown in Fig. 2.

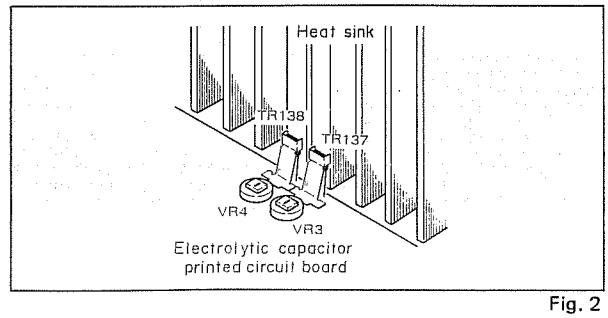

Fig. 2

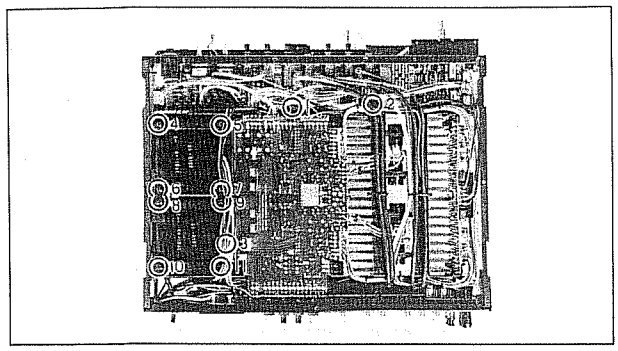

Photo 4

6. Drive printed circuit board removal

a. Remove the top and bottom covers. (Refer to Steps 1 and 2.)

b. Disconnect the lead wires which are connected to the terminals on the drive printed circuit board.

c. Hold the (1) and (2) holders shown in Photo 5 between small pincers and push them in the direction of the arrows to remove them. Now pull the drive printed circuit board up and remove.

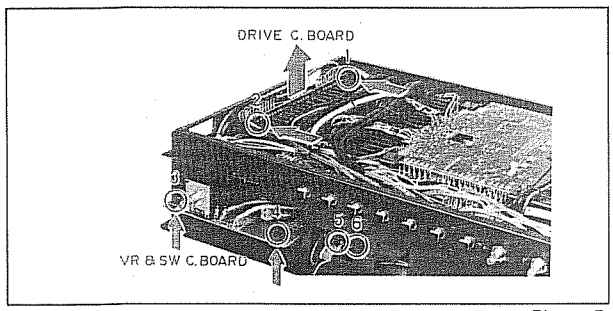

Photo 5

7. VR & SW printed circuit board removal

a. Remove the front panel. (Refer to Step 3.)

b. Push the (3) and (4) plastic rivets shown in Photo 5 from the rear and remove.

c. Remove screws (5) and (6) in Photo 5.

d. Pull out the connectors and pin jacks of the VR & SW printed circuit board, detach the lead wires and then remove the board itself.

8. Preamplifier printed circuit board

a. Remove the front panel. (Refer to Step 3.)

b. Remove screws (1) to (7) in Photo 6 as well as screws (1) and (2) in Photo 4.

* Remove the VR & SW printed circuit board to remove screw (7).

c. Detach the lead wires and the connectors which are connected to the preamplifier printed circuit board and then the board itself.

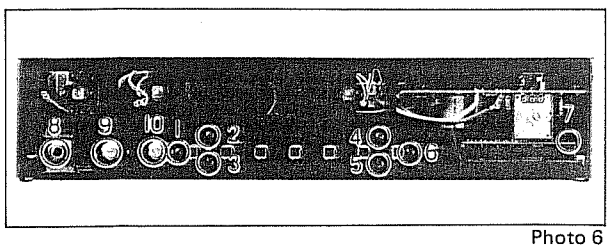

Photo 6

9. Tone control printed circuit board

a. Remove the front panel. (Refer to Step 3.)

b. Remove hexagonal nuts (8) to (10) in Photo 6 and then the tone control printed circuit board.

10. Power transformer removal

a. Remove the top and bottom covers. (Refer to Steps 1 and 2.)

b. Remove screws (1) at either side of the rear panel (see Photo 7) and then loosen screws (2) and lean the rear panel back.

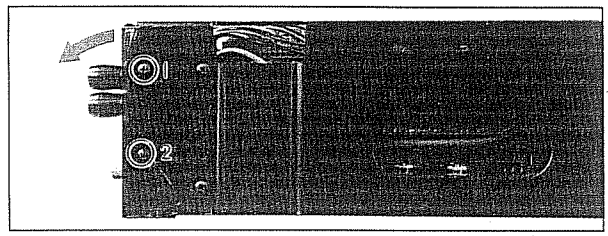

Photo 7

c. Detach the lead wires which are connected to the power transformer and electrolytic capacitor printed circuit board as well as to the AC outlets and the lead wires connected to the fuse.

d. Remove screws (4) to (7) and (8) to (11) in Photo 4, and then remove the power transformers.

11. Pin jack printed circuit board and pin jack removal

a. Remove screws (1) to (7) in Photo 8. (The photo shows a US & Canadian models.)

b. Lean the rear panel back, referring to the procedure under 'a' and 'b' of Step 10 (power transformer removal).

c. Detach the four pin plugs of the pin jack printed circuit board, and then remove the board itself.

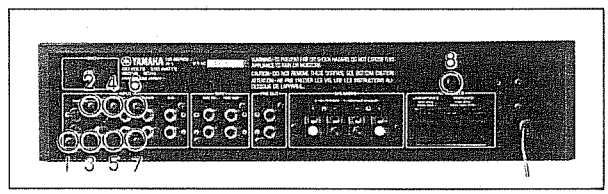

Photo 8

12. Power fuse replacement (the fuse rating differs according to the destination of the model)

a. Lean the rear panel back, referring to the procedure under 'a' and 'b' of Step 10 (power transformer removal).

b. The fuse holder is located behind the screw in Photo 8. Replace the fuse with a 7.0AT, 250V unit.

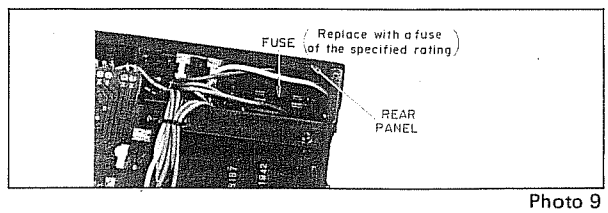

Photo 9

CIRCUIT DESCRIPTIONS

MC head amplifier circuit
The MC head amplifier circuit used in the A-1 features a configuration which is similar to that of the equivalent circuit inside the C-2's head amplifier IC. Low-noise transistors are connected in complementary parallel and serve to effectively reduce the noise components.

Principle behind noise reduction with parallel connection
It is assumed that the two signal sources in Fig. 1, e1 and e2, have internal resistances R1 and R2, respectively. If the resistors and signal sources are connected in parallel, the output voltage e0 will be:

$$e0 = e1 \times R2/R1 + R2 + e2 \times R1/R1 + R2) \ldots 1$$

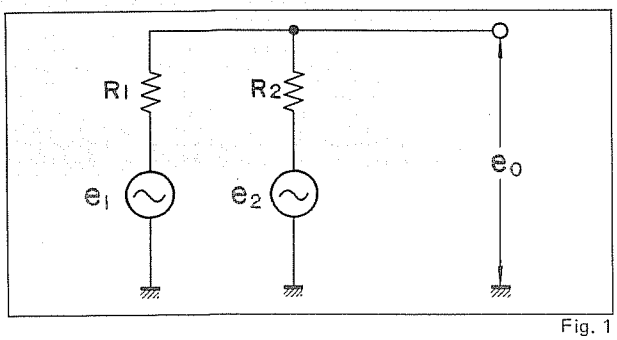

Fig. 1

If e1 is equivalent to e2 and if R1 is equivalent to R2, then e0 = e1 = e2, and when e1 and e2 have the opposite phase, the two signals are canceled out and there will be no output voltage e0.
If the same two amplifiers are connected in parallel, they will have the same phase with respect to the signal components and so the value of e0 will not change. However, the noise components will configure separate signals in each amplifier, at times being canceled out, and at times remaining unchanged in the same phase.
Considered from total perspective, the phase difference between the two signals will be neither 0° or 180° but conceivably an average of 90°. From this observation, the first part of the right half of formula (1) will be:

$$e1 \times R2/R1 + R2 = 1/2e1 \quad \because R1 = R2$$

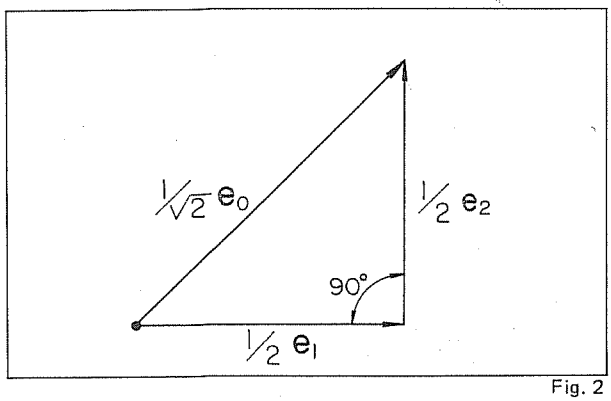

Fig. 2

In the same way, the second part will be 1/2e2 and the vectors will join at a 90° angle. This means that, as in Fig. 2, the noise components will be $1/\sqrt{2}$ e0. In this way, the noise can be considered reduced by 3dB when two of the same amplifiers are connected in parallel.
Based on this approach, it is possible to come to the following formula between the degree by which the noise is reduced (dB) and the number of amplifier stages (N) connected in parallel:

$$dB = 10 \log_{10} N \qquad (2)$$

In the case of the A-1's MC head amplifier, the two-stage parallel connection brings about a noise reduction of 3dB (theoretical value). However, as shown in Fig. 3, there are two types of noise in an amplifier: one that accompanies the voltage and the other that accompanies the current. It is therefore necessary to subtract the overall noise components.
Contrary to the voltage noise, the current noise is in direct proportion to the thermal noise of the signal source resistance, and so it is necessary to determine the number of parallel connections which agrees with the signal source resistance.

* Voltage noise (noise unrelated to the signal source resistance)
* Current noise (noise which increases in direct proportion to the signal source resistance)
* Thermal noise of the signal source resistance (noise which increases in proportion to the square root of the signal source resistance.

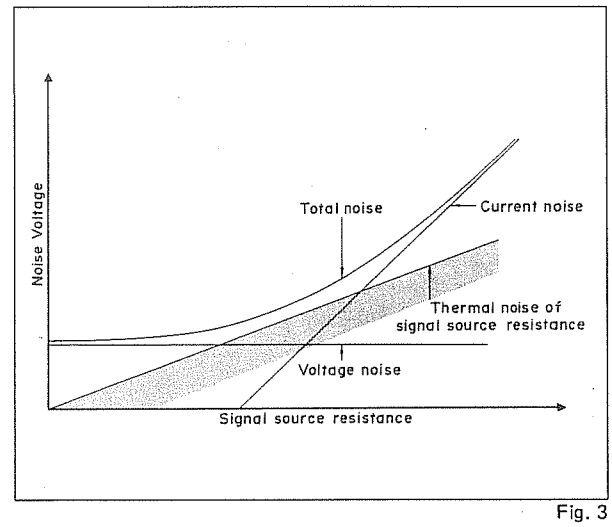

Fig. 3

BLOCK DIAGRAM/LEVEL DIAGRAM

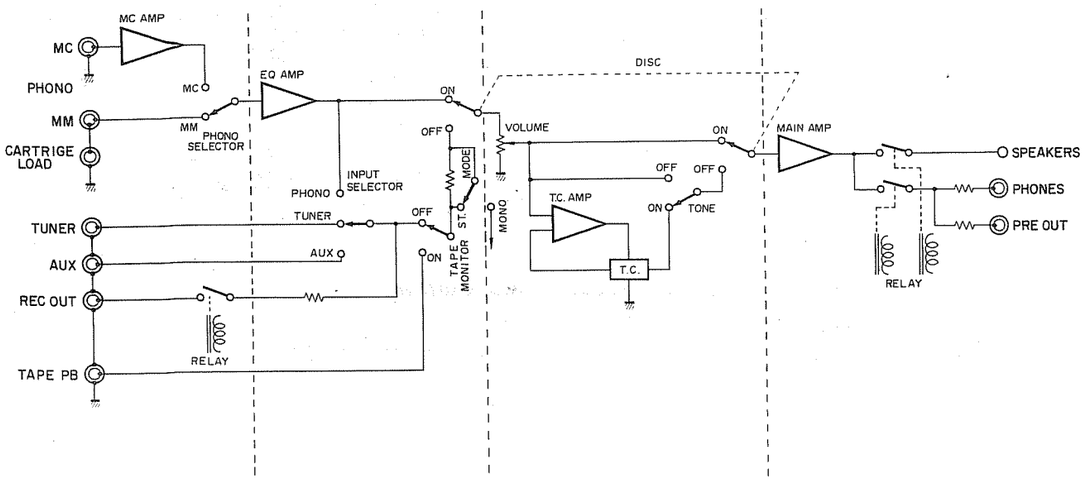

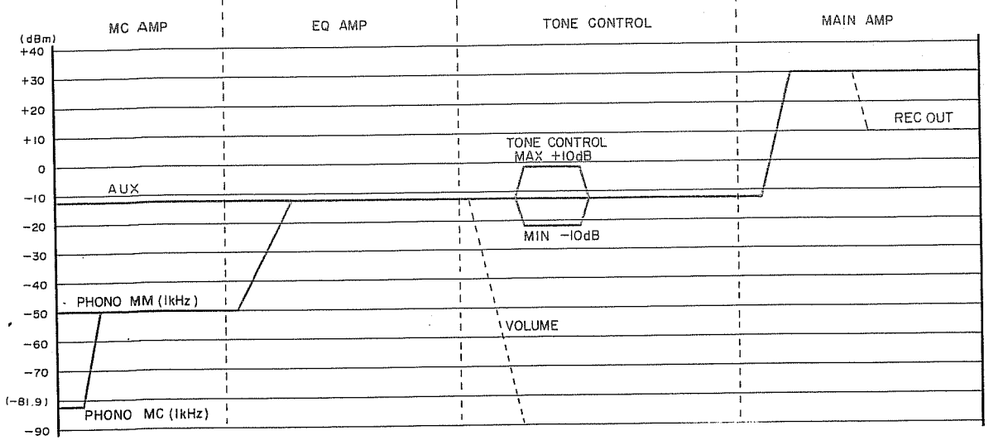

ADJUSTMENT

BEFORE MEASUREMENT

- After the power switch is push on, wait 3 ~ 4 minutes before measuring, to be sure of the most stable operation.
- Connect dummyload resistance (70W) to the speaker terminals.
- VOLUME CONTROL → MIN

STEP	ADJUSTMENT ITEM	ADJUSTMENT	INSTRUMENTS	TERMINALS/ TEST POINT	PATING OR STANDARD	RE-MARKS
1	POWER Suplly Voltage	POWER P.C.B	Digital Multi Meter	POWER R.C.B	+35 ± 1V −35 ± −0.5V	Fig. 1
2	EQALIZER AMP DC Offset Voltage	PRE AMP P.L.B VR401 (L CH) VR402 (R CH)	Digital Multi Meter	PRE AMP P.C.B TP1 (L CH) TP2 (R CH)	0V ± 200mV	Fig. 2
3	MC AMP Distortion	VR & SW P.C.B VR301 (L CH) VR302 (R CH)	Audio Frequency Generator 20KHz Distortion ratio Meter	REC OUT JACK (20KHz, 3V)	Distortion → Min	Fig. 3
4	DRIVE CIRCUIT DC Offset Voltage	DRIVE P.C.B VR501 (L CH) VR502 (R CH)	Digital Multi Meter	DRIVE P.C.B TP1, TP2 (L CH) TP2, TP4 (R CH)	0V ± 10mV	Fig. 4
5	POWER AMP Indring Current	Electrolytic Capacitor P.C.B VR101 (L CH) VR102 (R CH)	Digital Multi Meter	Electrolytic Capacitor P.C.B TP1, TP3 (L CH) TP2, TP4 (R CH)	7.4 ± 2mV	Fig. 5

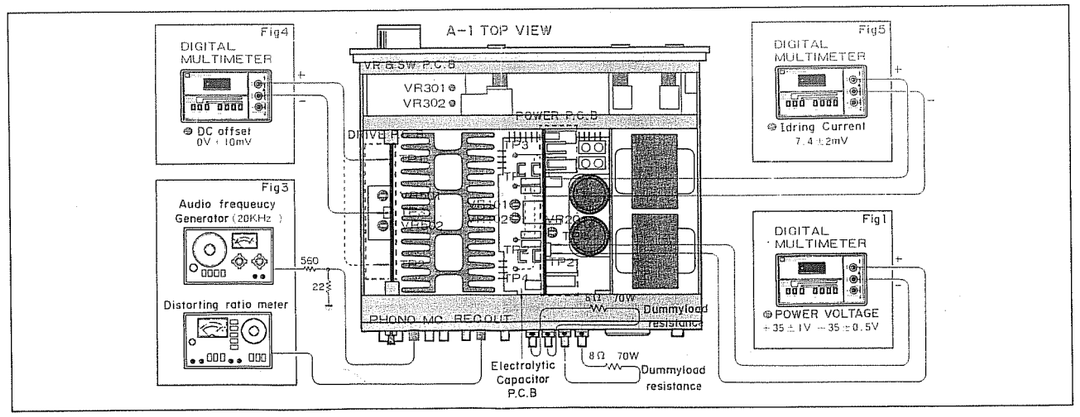

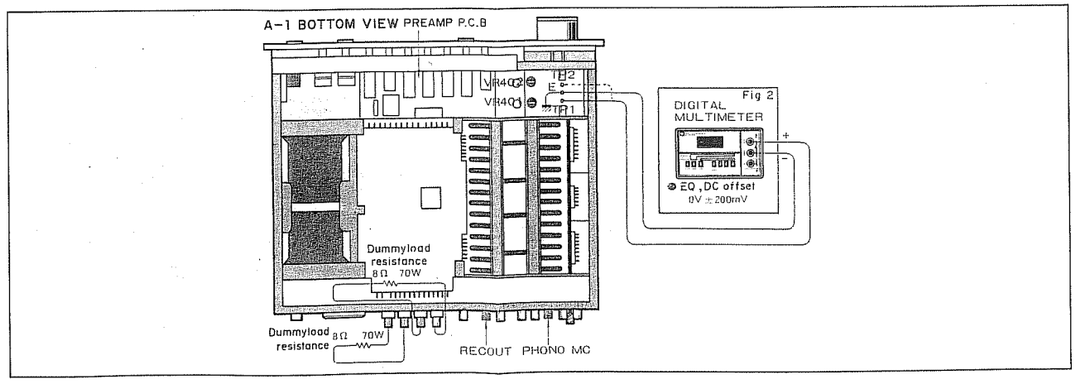

WIRING

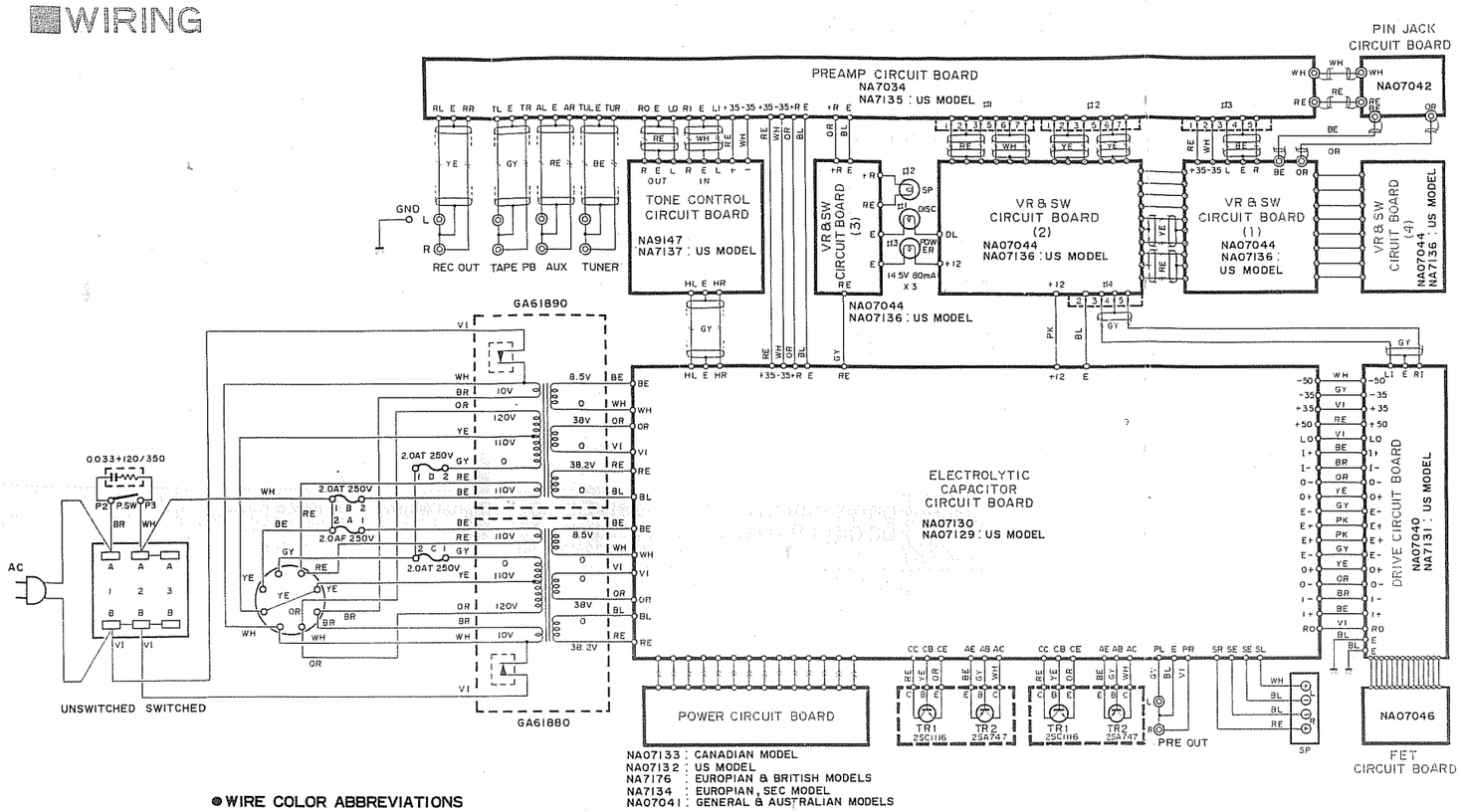

NA07133 : CANADIAN MODEL
NA7132 : US MODEL
NA7176 : EUROPIAN & BRITISH MODELS
NA7134 : EUROPIAN, SEC MODEL
NA07041 : GENERAL & AUSTRALIAN MODELS

● WIRE COLOR ABBREVIATIONS

BL ▶	Black	VI ▶	Violet
BR ▶	Brown	GY ▶	Gray
RE ▶	Red	WH ▶	White
OR ▶	Orange	GG ▶	Grass Green
YE ▶	Yellow	SB ▶	Sky Blue
GR ▶	Green	PK ▶	Pink
BE ▶	Blue		

PRINTED CIRCUIT BOARDS

1. PINJACK CIRCUIT BOARD NA07042

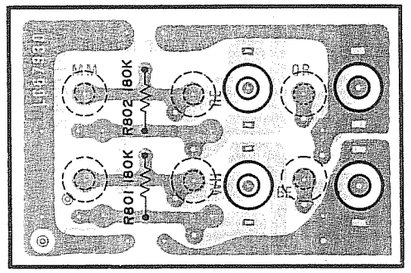

2. FET CIRCUIT BOARD NA07046

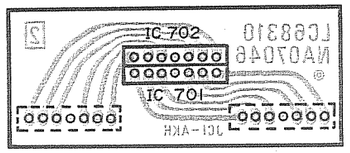

3. PREAMP CIRCUIT BOARD NA07043, NA07135 : US model

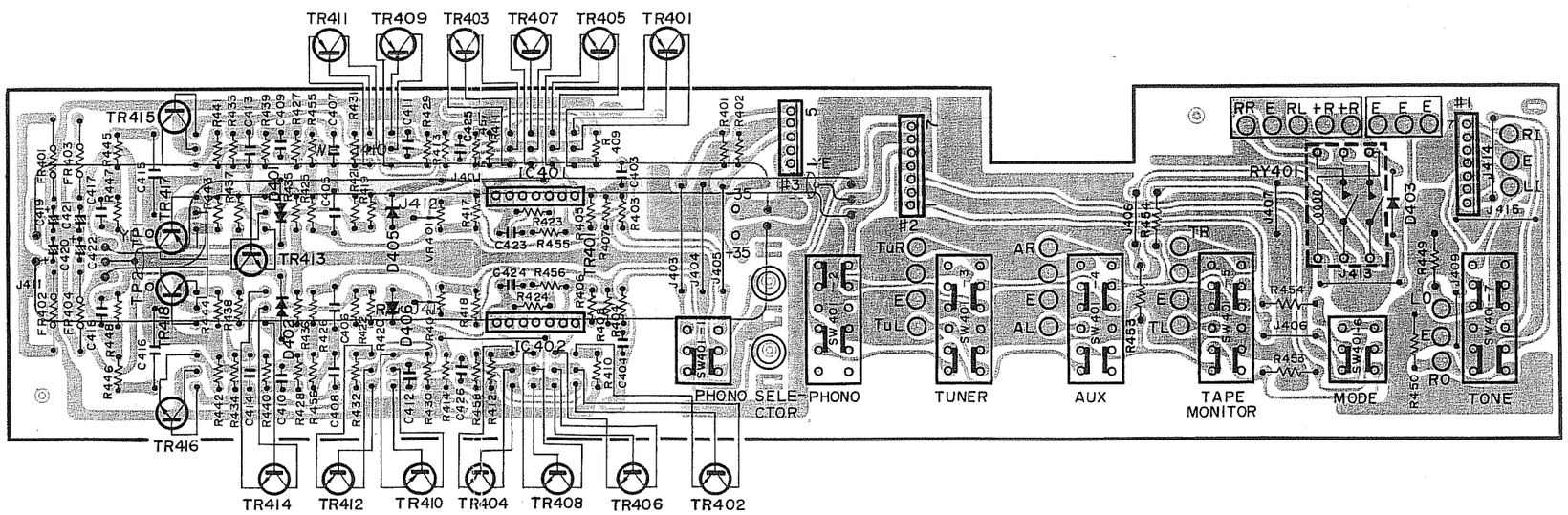

4. VR & SW CIRCUIT BOARD NA07044, NA07035: US model only

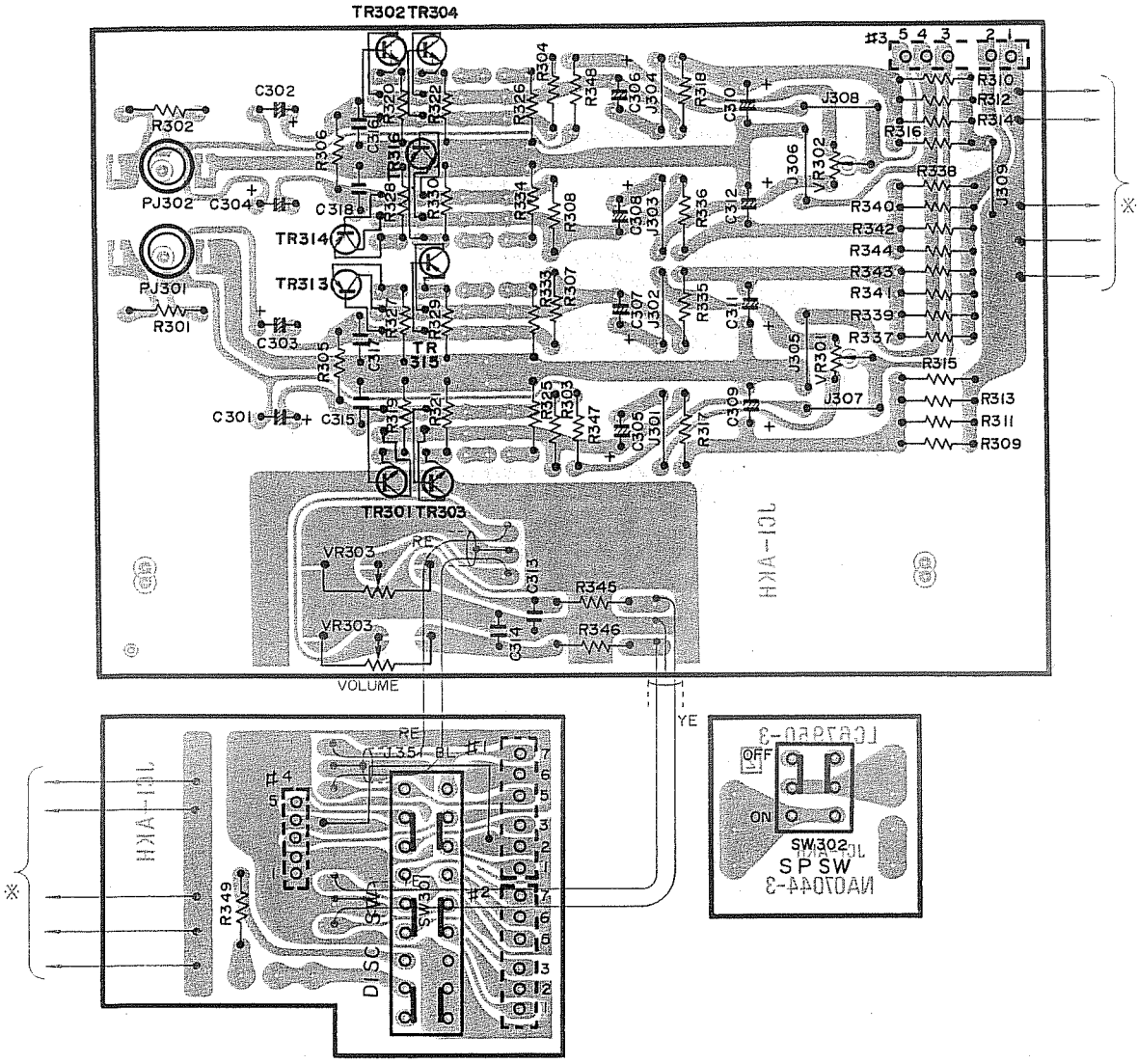

5. TONE CONTROL CIRCUIT BOARD NA07045

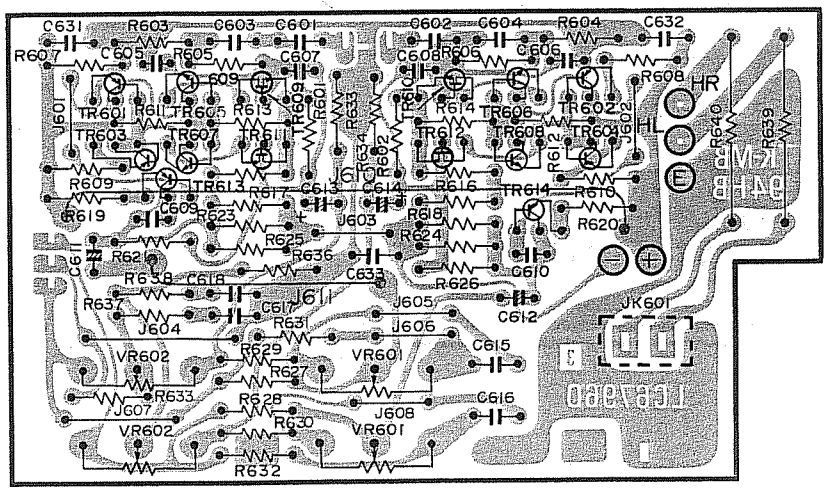

6. DRIVE CIRCUIT BOARD NA07040, NA07031: US model only

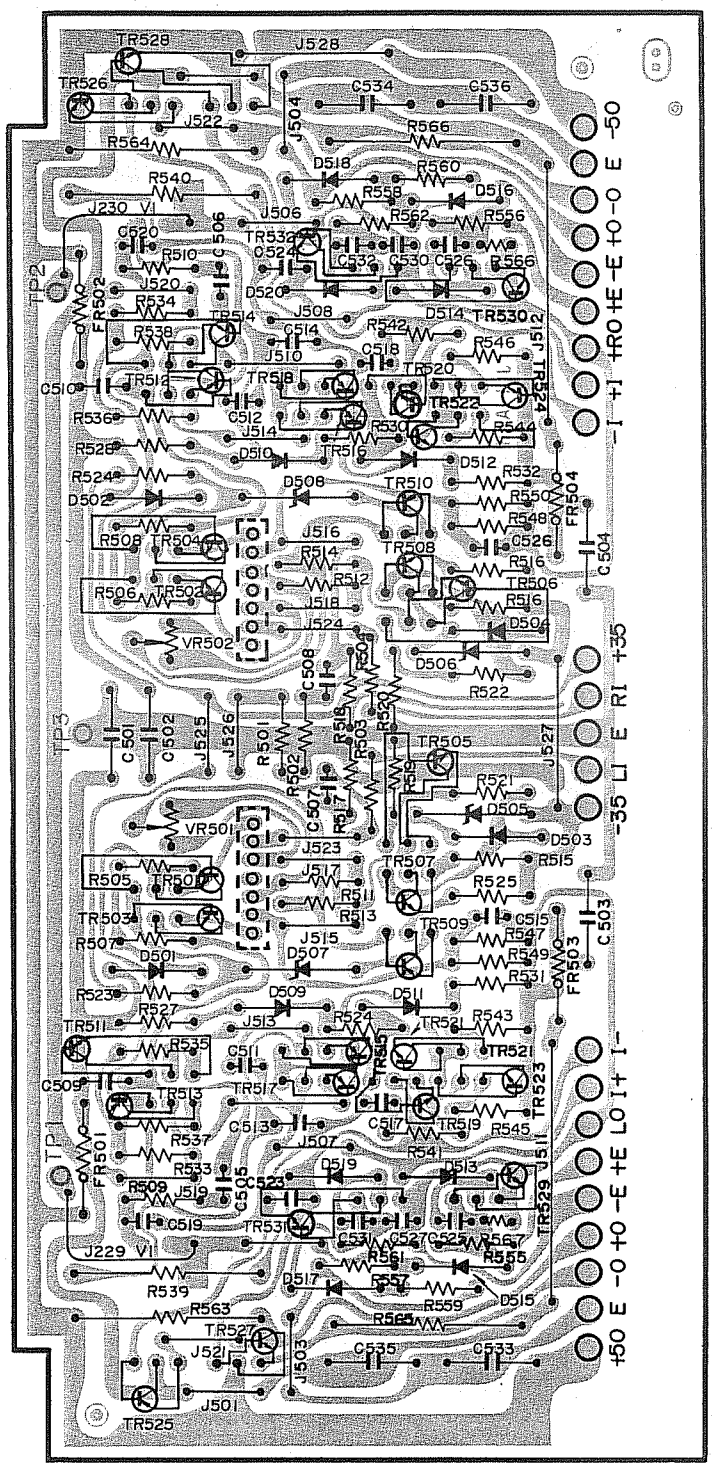

7. ELECTROLYTIC CAPACITOR CIRCUIT BOARD NA07130, NA07129: US model only

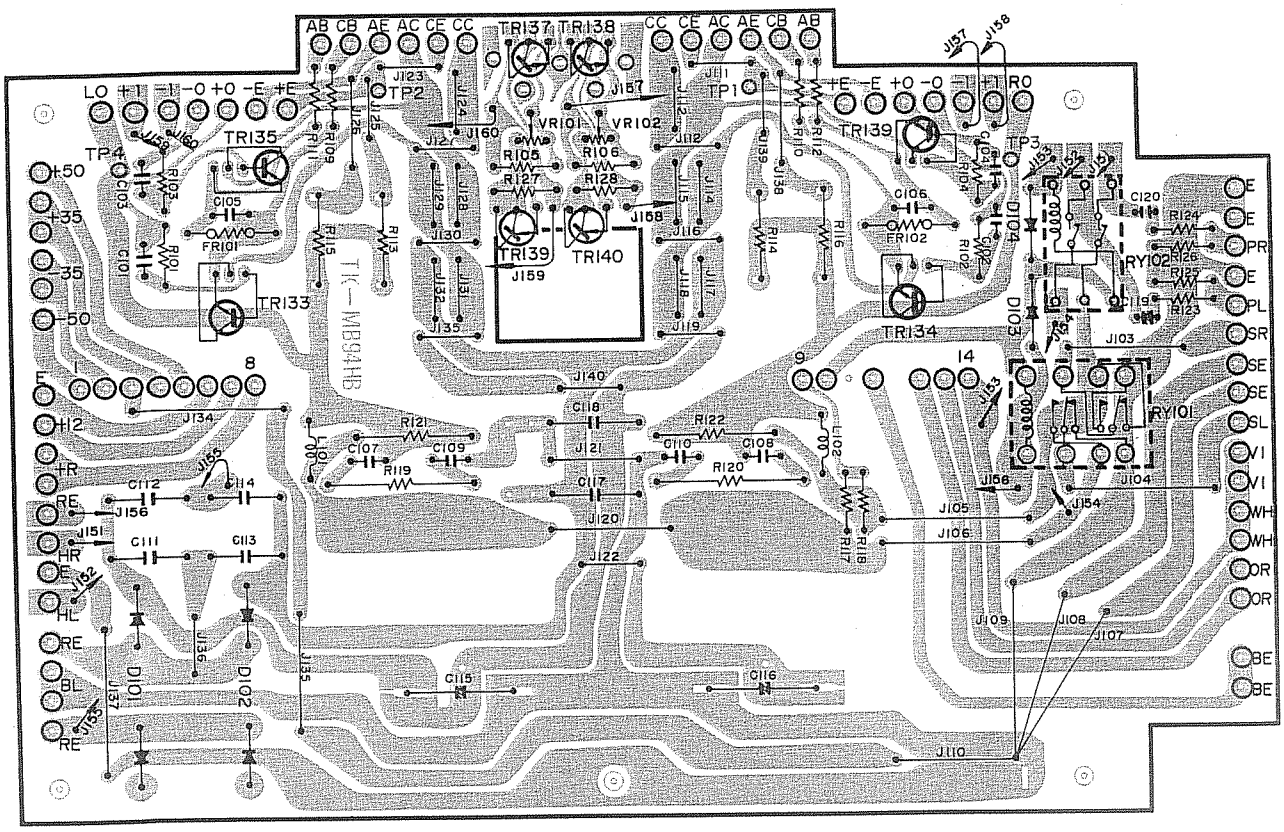

8. POWER CIRCUIT BOARD NA07041: GENERAL models, NA07132: US model
NA07133: CANADIAN model, NA07134: EUROPEAN, PC model
NA07176: EUROPEAN model

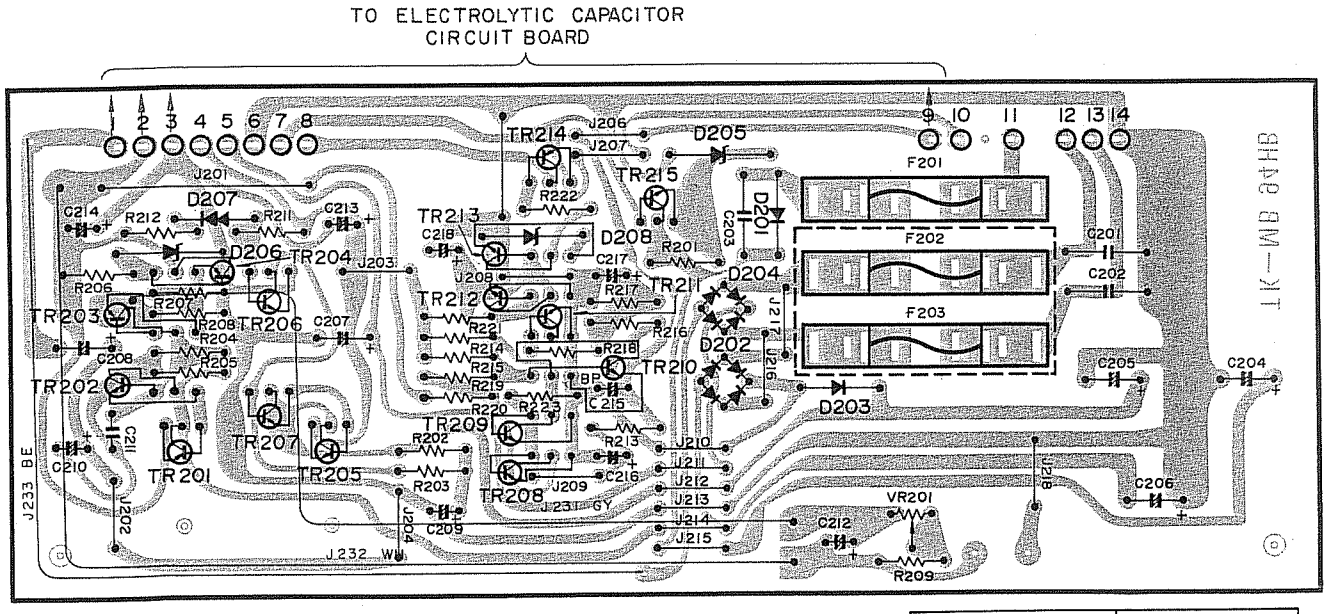

F202, 203: GENERAL, AUSTRALIAN, EUROPEAN, BRITISH models

MODELS	F201, 202, 203
GENERAL AUSTRALIAN	1.0A/125V
US & CANADIAN	1A/250V
EUROPEAN, BRITISH, ESPEC	800mA/250V

PARTS LIST

A-1

Exproded view

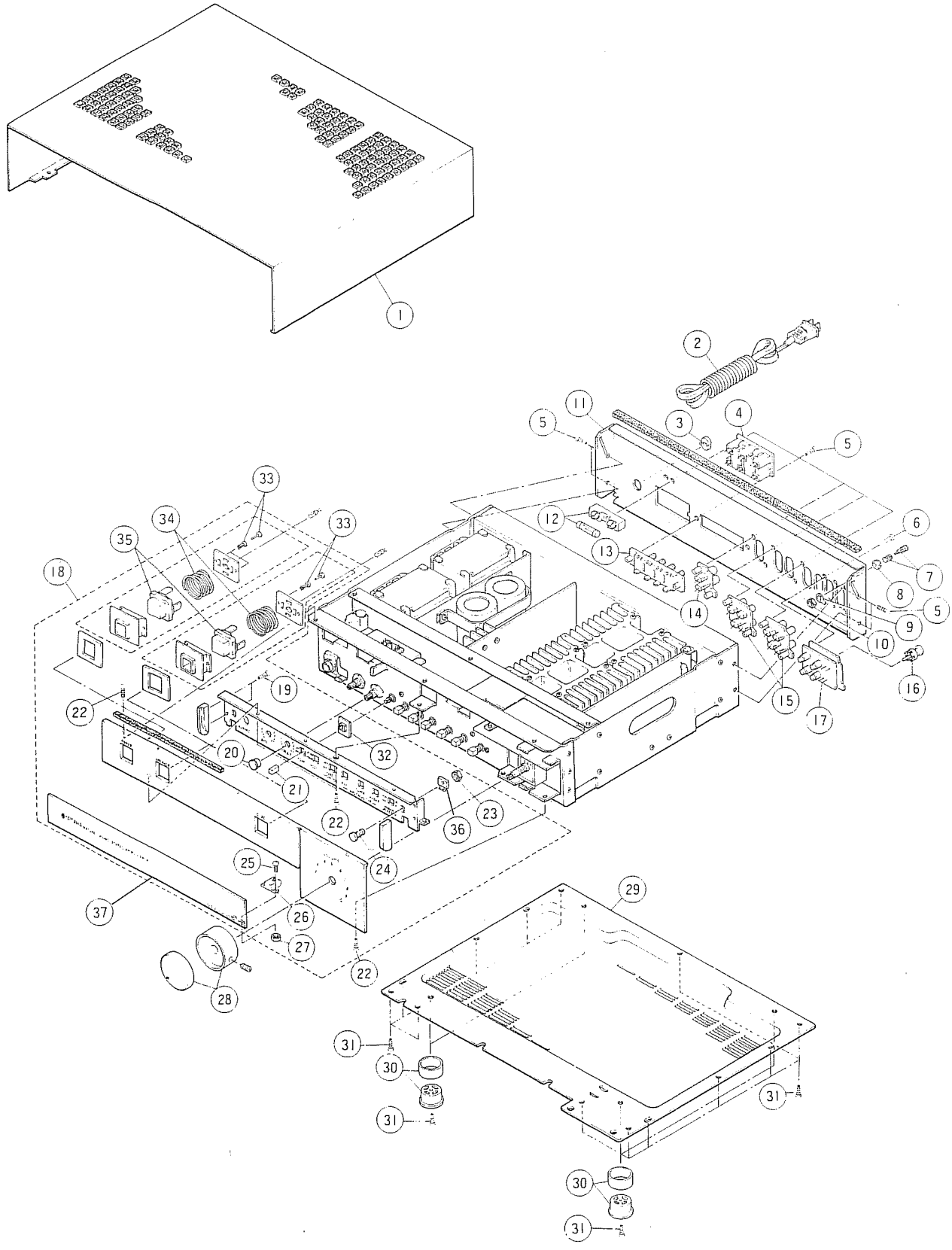

Parts List

	Ref. No.	Part No.	Description	Markets	Remarks
*	1	32 00 00 AA 09 30 80	Topcover		
*	2	42 00 00 MG 00 03 40	AC Cord 8F 105°C	R, U, C	
		42 00 00 MG 00 04 60	—do.— VM0077 6A	E, G	
		42 00 00 MG 00 08 50	—do.— type A4, 7.5A 240V	A	
		32 00 00 MZ 07 28 90	AC Cord Ass'y	B	
	3	42 00 00 CB 07 27 50	Cord Stopper SR-4N-4	B	
		42 00 00 CB 06 86 30	—do.— SR-3P-4	R, U, A, E, G, C	
	4	42 00 00 LB 60 18 80	AC Socket	R, U, C	
	5	42 00 00 EN 33 00 10	Bind Head Tapping Screw M3 x 8 FCM3-BL		
	6	42 00 00 ED 33 00 60	Bind Head Screw M3 x 6 FCM3-BL		
	7	32 00 00 NB 08 14 80	Terminal Ass'y		
	8	32 00 00 CB 07 81 70	Saucer		
	9	42 00 00 LA 00 02 80	Earth Lug 3 mm FCM3-BL		
	10	42 00 00 EV 10 33 00	Hexagonoral Nut M3 FCM3-BL		
*	11	32 00 00 AA 09 31 00	Rear Panel	R	
		32 00 00 AA 09 31 10	—do.—	U, C	
		32 00 00 AA 09 31 20	—do.—	A	
		32 00 00 AA 09 31 30	—do.—	E	
		32 00 00 AA 09 31 40	—do.—	G	
		32 00 00 AA 09 31 50	—do.—	B	
*	12	42 00 00 LB 20 12 10	Fuse Holder	R	
		42 00 00 LB 20 13 00	—do.—	U, A, C	
		42 00 00 LB 20 14 70	—do.—	E, G, B	
*	13	42 00 00 LA 00 23 10	Speaker Terminal (4P)		
*	14	42 00 00 LB 20 11 40	Pin-Jack (2P)		
	15	42 00 00 LB 40 03 90	—do.— (4P)		
	16	42 00 00 LB 10 01 80	Short plug		
*	17	32 00 00 NA 07 04 20	**Pin-Jack C. Board**		
*	18	32 00 00 NB 08 60 30	Panel Unit	R, A, E, C, B	
		32 00 00 NB 08 60 40	—do.—	U	
	19	42 00 00 EN 03 00 20	Bind Head Tapping Screw M3 x 8 ZMC2-Y		
*	20	32 00 00 BA 07 22 80	Knob, Tone Control		
*	21	32 00 00 CB 08 68 90	Push Button		
	22	42 00 00 EI 23 00 80	Bind Head Tapping Screw M3 x 8 FCrM3-3g		
*	23	32 00 00 AA 09 07 10	Hexagonal Nut M5		
*	24	32 00 00 BA 07 34 70	Screw #7347		
	25	42 00 00 EA 23 00 60	Pan Head Screw M3 x 6 FCrM3-3g		
*	26	32 00 00 CB 08 69 00	Shaft for Rolling Panel		
	27	42 00 00 EV 10 20 30	Hexagonal Nut M3 FCrM3-3g		
*	28	32 00 00 NB 08 57 90	Knob Ass'y		
*	29	32 00 00 AA 09 30 90	Bottom Cover		
*	30	32 00 00 NB 07 94 90	Leg Ass'y		
	31	42 00 00 EN 03 00 20	Bind Head Tapping Screw M3 x 8 ZMC2-Y		
*	32	32 00 00 CB 07 45 10	Push Button Frame		
	33	32 00 00 CB 06 88 80	Plastic Rivet		
*	34	32 00 00 AA 08 99 80	Spring for Push Botton		
*	35	32 00 00 CB 08 36 40	Push Button		
	36	32 00 00 CB 08 69 10	Shaft Holder		
	37	32 00 00 BA 07 34 20	Rolling Panel		

* New parts

Exproded view

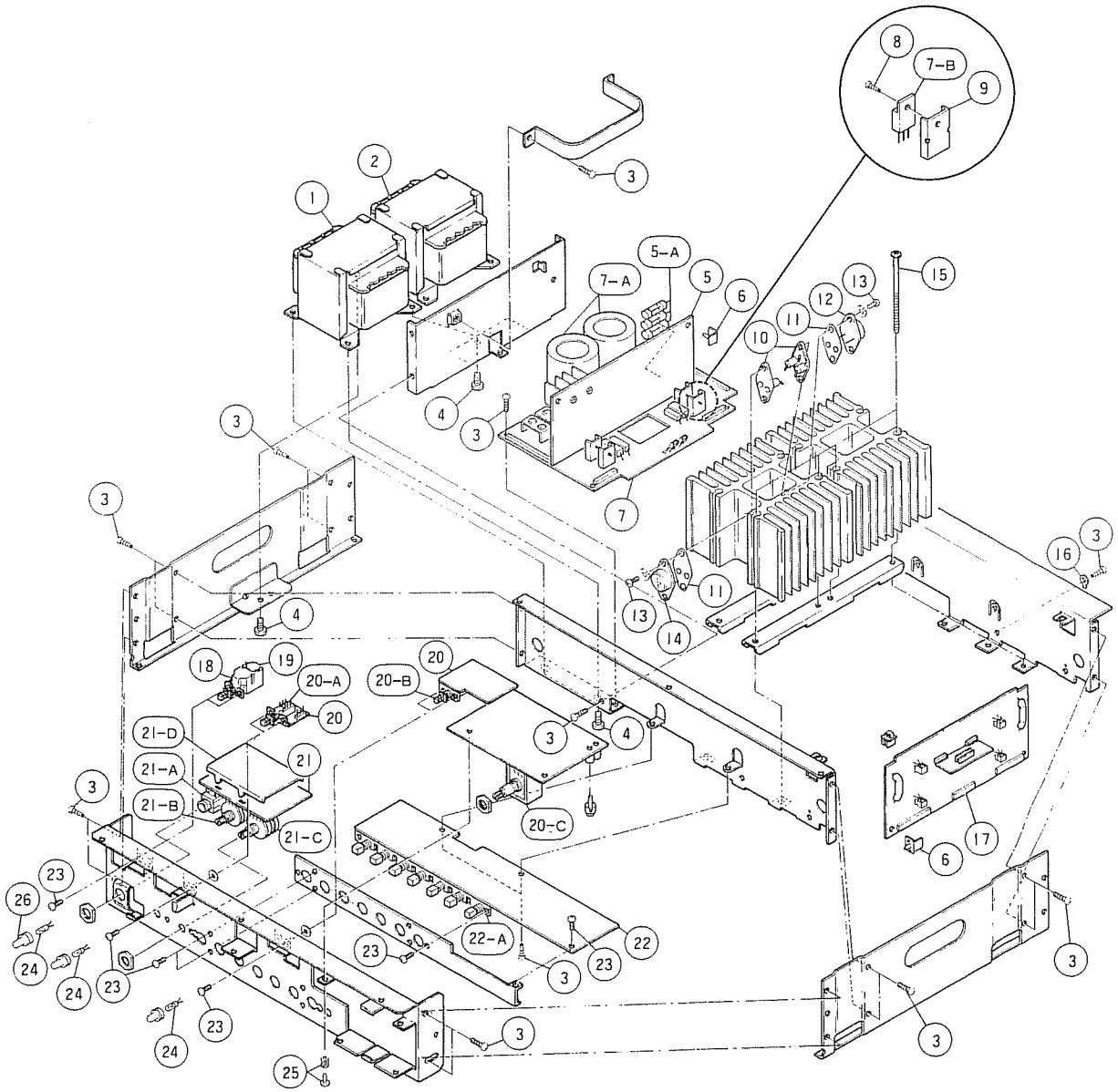

Parts List

	Ref. No.	Part No.	Description		Markets	Remarks
*	1	42 00 00 GA 61 86 00	Transformer	Front	U, C	
		42 00 00 GA 61 88 00	—do.—	—do.—	R, E	
		42 00 00 GA 61 90 00	—do.—	—do.—	G	
		42 00 00 GA 61 92 00	—do.—	—do.—	A, B	
*	2	42 00 00 GA 61 87 00	—do.—	Rear	U, C	
		42 00 00 GA 61 89 00	—do.—	—do.—	R, E	
		42 00 00 GA 61 91 00	—do.—	—do.—	G	
		42 00 00 GA 61 93 00	—do.—	—do.—	A, B	
	3	42 00 00 EN 33 00 10	Bind Head Tapping Screw	M3 x 8 FCM3-BL		
	4	42 00 00 EZ 00 03 90	Blaze-Washer Head Screw	M4 x 8 ZMC2-Y		
*	5	32 00 00 NA 07 04 10	**Power Supply C. Board**		R, A	
		32 00 00 NA 07 13 20	—do.—		U	
		32 00 00 NA 07 13 30	—do.—		C	
		32 00 00 NA 07 13 40	—do.—		E, G, B	
	F201	42 00 00 KB 00 01 00	Fuse	1.0AT 125V	R, A	
	F202	42 00 00 KB 00 10 60	—do.—	1A 250V ST-4	U, C	
	F203	42 00 00 KB 00 07 20	—do.—	800mA 250V	E, G, B	
*	6	32 00 00 CB 08 77 90	C. Board Holder			
*	7	32 00 00 NA 07 12 90	**Electrolytic Cap. C. Board**		U	
		32 00 00 NA 07 13 00	—do.—		R, A, E, G, C, B	
*	C115	42 00 00 FZ 00 11 80	Electrolytic Cap. Lug Type	18000μF/63V		
	C116	42 00 00 FZ 00 11 80	—do.—			
	Tr135	42 00 00 iA 09 13 00	Transistor	2SA913		
	Tr136	42 00 00 iA 09 13 00	—do.—	—do.—		
	8	42 00 00 EN 03 00 20	Pan Head Tapping Screw	M3 x 8 ZMC2-Y		
	9	32 00 00 BA 06 27 60	Radistor			
	10	42 00 00 LB 30 04 90	Transistor Socket			
	11	42 00 00 iL 00 02 30	Mica Base			
	12	42 00 00 iA 07 47 10	Transistor	2SA747		
	13	42 00 00 EZ 33 01 60	BW Head Screw	M3 x 16 FNM3-3m		
	14	42 00 00 iC 11 16 10	Transistor	2SC1116		
	15	42 00 00 EA 34 08 70	Pan Head Screw	M4 x 87 FCM3-BL		
	16	42 00 00 LA 00 02 80	Earth Lug	φ3 mm		
*	17	32 00 00 NA 07 04 00	**Drive C. Board**		R, A, E, G, C, B	
		32 00 00 NA 07 13 10	—do.—		U	
*	18	42 00 00 KA 80 04 90	Power Switch	125V 15A		
	19	42 00 00 FZ 00 09 70	Ceramic Cap.	0.01μF / 150V		
*	20	32 00 00 NA 07 04 40	**VR & SW C. Board**		R, A, E, G, C, B	
		32 00 00 NA 07 13 60	—do.—		U	
*	SW301	42 00 00 KA 80 04 70	Push Switch for Speaker			
*	SW302	42 00 00 KA 80 04 80	Push Switch for Disk			
*	VR303	42 00 00 HY 00 06 50	Variable Resistor	A-50K		
*		32 00 00 BB 06 63 40	Sealed Plate			
*	21	32 00 00 NA 07 13 70	**Tone Control C. Board**		U	
		32 00 00 NA 07 14 70	—do.—		R, A, E, G C, B	
*	JK601	42 00 00 LB 30 06 40	Headphone Jack	JK601		
*	VR601	42 00 00 HS 32 04 20	VR Bass Control	B30K x 2		
*	VR602	42 00 00 HS 32 04 80	VR Treble Control	W-10K x 2		

* New parts

Ref. No.	Part No.	Description	Markets	Remarks
22	32 00 00 NA 07 04 30	**Pre C. Board**	R, A, E G, C, B	
	32 00 00 NA 07 13 50	—do.—	U	
SW401	42 00 00 KA 80 04 60	Push Switch		
23	42 00 00 ED 33 00 60	Bind Head Screw M3 x 6 FCM3-BL		
24	42 00 00 JB 00 06 10	Pilot Lamp 14.5V 80mA		
25	42 00 00 CB 06 88 80	Plastic Rivet		
26	42 00 00 CB 08 41 80	Lamp Cap of Orange Color		

*New parts

Ref. No.	Part No.	Description		Markets	Remarks
* 5	32 00 00 NA 07 04 10	**Power Supply C. Board**		R, A	
	32 00 00 NA 07 13 20	—do.—		U	
	32 00 00 NA 07 13 30	—do.—		C	
	32 00 00 NA 07 13 40	—do.—		E, G B	
Tr201	42 00 00 iB 05 66 00	Transistor	2SB566		
Tr202	42 00 00 iA 08 72 00	—do.—	2SA872		
Tr203	42 00 00 iA 08 72 00	—do.—	—do.—		
Tr204	42 00 00 iA 08 72 00	—do.—	—do.—		
Tr205	42 00 00 iD 04 76 00	—do.—	2SD476A		
Tr206	42 00 00 iC 17 75 00	—do.—	2SC1775		
Tr207	42 00 00 iC 17 75 00	—do.—	—do.—		
Tr208	42 00 00 iA 08 44 10	—do.—	2SA844		
Tr209	42 00 00 iC 19 18 00	—do.—	2SC1918		
Tr210	42 00 00 iC 19 18 00	—do.—	—do.—		
Tr211	42 00 00 iC 19 18 00	—do.—	—do.—		
Tr212	42 00 00 iC 12 13 10	—do.—	2SC1213A		
Tr213	42 00 00 iC 19 18 00	—do.—	2SC1918		
Tr214	42 00 00 iA 06 73 10	—do.—	2SC673A		
Tr215	42 00 00 iD 05 26 30	—do.—	2SD526		
D201	42 00 00 iH 00 02 40	Diode	1S1815		
D202	42 00 00 iH 00 04 70	—do.—	1D431		
D203	42 00 00 iH 00 02 40	—do.—	1S1815		
D204	42 00 00 iH 00 04 70	—do.—	1D431		
D205	42 00 00 iF 00 03 50	Zener Diode	WZ-130		
D206	42 00 00 iF 00 05 70	—do.—	HZ-6C		
D207	42 00 00 iF 00 07 70	—do.—	VD1212		
D208	42 00 00 iF 00 05 70	—do.—	HZ-6C		
C201	42 00 00 FZ 00 06 80	MM Cap.	0.1μF / 250V		
C202	42 00 00 FZ 00 06 80	—do.—	—do.—		
C203	42 00 00 FZ 00 06 80	—do.—	—do.—		
C204	42 00 00 FJ 14 91 00	Electrolytic Cap.	1000μF/ 25V		
C205	42 00 00 FJ 17 84 70	—do.—	470μF / 63V		
C206	42 00 00 FJ 17 84 70	—do.—	—do.—		
C207	42 00 00 FJ 17 84 70	—do.—	—do.—		
C208	42 00 00 FJ 17 84 70	—do.—	—do.—		
C209	42 00 00 FJ 16 74 70	—do.—	47μF / 50V		
C210	42 00 00 FJ 16 74 70	—do.—	—do.—		
C211	42 00 00 FA 11 41 00	Mylar Cap.	0.01μF / 50V MS (K)		
C212	42 00 00 FJ 15 71 00	Electrolytic Cap.	1000μF / 25V		
C213	42 00 00 FJ 16 74 70	—do.—	47μF / 50V		
C214	42 00 00 FJ 16 74 70	—do.—	—do.—		
C215	42 00 00 FM 11 71 00	Bipolar Cap.	10μF / 50V		
C216	42 00 00 FZ 00 04 70	Electrolytic Cap.	10μF / 16V MS		
C217	42 00 00 FZ 00 02 50	—do.—	0.47μF / 50V MS		
C218	42 00 00 FM 39 81 00	—do.—	100μF / 16V Z		
R201	42 00 00 HK 15 54 70	Carbon Resistor	470Ω		
R202	42 00 00 HK 15 66 80	—do.—	6.8KΩ		
R203	42 00 00 HK 15 68 20	—do.—	8.2KΩ		
R204	42 00 00 HK 15 68 20	—do.—	—do.—		
R205	42 00 00 HK 15 66 80	—do.—	6.8KΩ		
R206	42 00 00 HK 15 73 30	—do.—	33KΩ		
R207	42 00 00 HK 15 62 20	—do.—	2.2KΩ		
R208	42 00 00 HK 15 61 50	—do.—	1.5KΩ		

*New parts

Ref. No.	Part No.	Description			Markets	Remarks
R209	42 00 00 HK 15 66 80	Carbon Resistor	6.8KΩ			
R211	42 00 00 HK 15 71 00	—do.—	10KΩ			
R212	42 00 00 HK 15 71 00	—do.—	—do.—			
R213	42 00 00 HK 15 81 00	—do.—	100KΩ			
R214	42 00 00 HK 15 81 80	—do.—	180KΩ			
R215	42 00 00 HK 15 82 20	—do.—	220KΩ			
R216	42 00 00 HK 15 71 00	—do.—	10KΩ			
R217	42 00 00 HK 15 62 70	—do.—	2.7KΩ			
R218	42 00 00 HK 15 64 70	—do.—	4.7KΩ			
R219	42 00 00 HK 15 76 80	—do.—	68KΩ			
R220	42 00 00 HK 15 81 00	—do.—	100KΩ			
R221	42 00 00 HK 15 73 30	—do.—	33KΩ			
R222	42 00 00 HK 15 62 20	—do.—	2.2KΩ			
R223	42 00 00 HK 15 76 80	—do.—	68KΩ			
VR201	42 00 00 HT 41 01 60	Variable Resistor	B2.2KΩ	SR-29R		
	42 00 00 LA 00 20 00	Wire Lapping Terminal		P = 7.5		
	42 00 00 LB 20 09 00	Fuse Holder Pin PC		YSH402P	R, U, A, C	
	42 00 00 LB 20 10 60	—do.—	—do.—		E, G, B	
	42 00 00 LB 30 01 30	Connector Socket	3P			
*	42 00 00 LB 40 04 50	—do.—	4P			
	32 00 00 BA 06 91 40	Radiator				

*New parts

	Ref. No.	Part No.	Description		Markets	Remarks
*	7	32 00 00 NA 07 12 90	**Electrolytic Cap. C. Board**		U	
		32 00 00 NA 07 13 00	—do.—		R, A, E, G, C, B	
	Tr133	42 00 00 iC 19 13 00	Transistor	2SC1913		
	Tr134	42 00 00 iC 19 13 00	—do.—	—do.—		
	Tr135	42 00 00 iA 09 13 00	—do.—	2SA913		
	Tr136	42 00 00 iA 09 13 00	—do.—	—do.—		
	Tr137	42 00 00 iC 12 13 10	—do.—	2SC1213A		
	Tr138	42 00 00 iC 12 13 10	—do.—	—do.—		
	D101	42 00 00 iH 00 02 10	Diode	S-5151		
	D102	42 00 00 iH 00 02 20	—do.—	S-5151R		
	D103	42 00 00 iF 00 00 40	—do.—	1S1555		
	D104	42 00 00 iF 00 00 40	—do.—	—do.—		
	C101	42 00 00 FD 15 23 30	Polystyrene Cap.	330μF / 500V (J)		
	C102	42 00 00 FD 15 23 30	—do.—	—do.—		
	C103	42 00 00 FD 15 23 30	—do.—	—do.—		
	C104	42 00 00 FD 15 23 30	—do.—	—do.—		
	C105	42 00 00 FA 11 45 60	Mylar Cap.	0.056μF / 50V MS (K)		
	C106	42 00 00 FA 11 45 60	—do.—	—do.—		
	C107	42 00 00 FA 11 51 00	—do.—	0.1μF / 50V MS (K)		
	C108	42 00 00 FA 11 51 00	—do.—	—do.—		
	C109	42 00 00 FA 11 51 00	—do.—	—do.—		
	C110	42 00 00 FA 11 51 00	—do.—	—do.—		
	C111	42 00 00 FZ 00 06 80	MM Cap.	0.1μF / 250V		
	C112	42 00 00 FZ 00 06 80	—do.—	—do.—		
	C113	42 00 00 FZ 00 06 80	—do.—	—do.—		
	C114	42 00 00 FZ 00 06 80	—do.—	—do.—		
	C115	42 00 00 FZ 00 11 80	Electrolytic Cap. Lug Type	18000μF/63V		
	C116	42 00 00 FZ 00 11 80	—do.—	—do.—		
*	C117	42 00 00 FC 12 62 20	Metalized Polyester Film Cap.	2.2μF / 100V		
	C118	42 00 00 FC 12 62 20	—do.—	—do.—		
*	C119	42 00 00 FM 09 71 00	Bi-Polar Electrolytic Cap.	10μF / 16V		
	C120	42 00 00 FM 09 71 00	—do.—	—do.—		
	L101	42 00 00 GD 90 00 50	Coil	3μH		
	L102	42 00 00 GD 90 00 50	—do.—	—do.—		
	R101	42 00 00 HK 15 53 30	Carbon Resistor	330Ω		
	R102	42 00 00 HK 15 53 30	—do.—	—do.—		
	R103	42 00 00 HK 15 53 30	—do.—	—do.—		
	R104	42 00 00 HK 15 53 30	—do.—	—do.—		
	R105	42 00 00 HK 15 58 20	—do.—	820Ω		
	R106	42 00 00 HK 15 58 20	—do.—	—do.—		
	R109	42 00 00 HK 15 34 70	—do.—	4.7Ω		
	R110	42 00 00 HK 15 34 70	—do.—	—do.—		
	R111	42 00 00 HK 15 34 70	—do.—	—do.—		
	R112	42 00 00 HK 15 34 70	—do.—	—do.—		
	R113	42 00 00 HM 05 24 70	Cement Molded Resistor	5P 0.47Ω		
	R114	42 00 00 HM 05 24 70	—do.—	—do.—		
	R115	42 00 00 HM 05 24 70	—do.—	—do.—		
	R116	42 00 00 HM 05 24 70	—do.—	—do.—		
	R117	42 00 00 HK 15 72 20	Carbon Resistor	22KΩ		
	R118	42 00 00 HK 15 72 20	—do.—	—do.—		
	R119	42 00 00 HL 62 41 00	Metal Oxide Resistor	2P 10Ω		
	R120	42 00 00 HU 62 41 00	—do.—	—do.—		
	R121	42 00 00 HZ 00 07 10	—do.—	1P 4.7Ω		

*New parts

Ref. No.	Part No.	Description		Markets	Remarks
R122	42 00 00 HZ 00 07 10	Metal Oxide Resistor	1P 4.7Ω		
R123	42 00 00 HK 15 66 80	Carbon Resistor	6.8KΩ		
R124	42 00 00 HK 15 66 80	—do.—	—do.—		
R125	42 00 00 HK 15 56 80	—do.—	680Ω		
R126	42 00 00 HK 15 56 80	—do.—	—do.—		
FR101	42 00 00 HW 19 46 80	Fuse Resistor	68Ω 60mA		
FR102	42 00 00 HW 19 46 80	—do.—	—do.—		
VR101	42 00 00 HT 41 00 20	Variable Resistor	B1KΩ SV10KR		
VR102	42 00 00 HT 41 00 20	—do.—	—do.—		
RY101	42 00 00 KC 00 05 30	Relay			
RY102	42 00 00 KC 00 03 00	Read Relay			
	42 00 00 LB 30 01 20	Connector	3P		
	42 00 00 LB 40 04 60	—do.—	—do.—		

*New parts

Ref. No.	Part No.	Description		Markets	Remarks
* 17	32 00 00 NA 07 04 00	**Drive C. Board**		R, A, E, G, C, B	
	32 00 00 NA 07 13 10	–do.–		U	
Tr501	42 00 00 iC 17 75 00	Transistor	2SC1775		
Tr502	42 00 00 iC 17 75 00	–do.–	–do.–		
Tr503	42 00 00 iC 17 75 00	–do.–	–do.–		
Tr504	42 00 00 iC 17 75 00	–do.–	–do.–		
Tr505	42 00 00 iC 17 75 00	–do.–	–do.–		
Tr506	42 00 00 iC 17 75 00	–do.–	–do.–		
Tr507	42 00 00 iC 17 75 00	–do.–	–do.–		
Tr508	42 00 00 iC 17 75 00	–do.–	–do.–		
Tr509	42 00 00 iA 08 72 00	–do.–	2SA872		
Tr510	42 00 00 iA 08 72 00	–do.–	–do.–		
Tr511	42 00 00 iA 06 73 30	–do.–	2SA673A, C, D		
Tr512	42 00 00 iA 06 73 30	–do.–	–do.–		
Tr513	42 00 00 iA 06 73 30	–do.–	–do.–		
Tr514	42 00 00 iA 06 73 30	–do.–	–do.–		
Tr515	42 00 00 iA 09 14 50	–do.–	2SA914Q, R, S, T		
Tr516	42 00 00 iA 09 14 50	–do.–	–do.–		
Tr517	42 00 00 iA 09 14 50	–do.–	–do.–		
Tr518	42 00 00 iA 09 14 50	–do.–	–do.–		
Tr519	42 00 00 iC 19 53 50	–do.–	2SC1953Q, R, S, T		
Tr520	42 00 00 iC 19 53 50	–do.–	–do.–		
Tr521	42 00 00 iC 12 13 10	–do.–	2SC1213A		
Tr522	42 00 00 iC 12 13 10	–do.–	–do.–		
Tr523	42 00 00 iC 12 13 10	–do.–	–do.–		
Tr524	42 00 00 iC 12 13 10	–do.–	–do.–		
Tr525	42 00 00 iA 09 14 50	–do.–	2SA914Q, R, S, T		
Tr526	42 00 00 iA 09 14 50	–do.–	–do.–		
Tr527	42 00 00 iC 19 53 50	–do.–	2SC1953Q, R, S, T		
Tr528	42 00 00 iC 19 53 50	–do.–	–do.–		
Tr529	42 00 00 iC 07 34 30	–do.–	2SC734		
Tr530	42 00 00 iC 07 34 30	–do.–	–do.–		
Tr531	42 00 00 iA 05 61 70	–do.–	2SA561		
Tr532	42 00 00 iA 05 61 70	–do.–	–do.–		
D501	42 00 00 iF 00 00 40	Diode	IS1555		
D502	42 00 00 iF 00 00 40	–do.–	–do.–		
D503	42 00 00 iF 00 00 40	–do.–	–do.–		
D504	42 00 00 iF 00 00 40	–do.–	–do.–		
D505	42 00 00 iF 00 05 70	Zener Diode	HZ6C		
D506	42 00 00 iF 00 05 70	–do.–	–do.–		
D507	42 00 00 iF 00 05 70	–do.–	–do.–		
D508	42 00 00 iF 00 05 70	–do.–	–do.–		
D509	42 00 00 iF 00 00 40	Diode	IS1555		
D510	42 00 00 iF 00 00 40	–do.–	–do.–		
D511	42 00 00 iF 00 00 40	–do.–	–do.–		
D512	42 00 00 iF 00 00 40	–do.–	–do.–		
D513	42 00 00 iF 00 00 40	–do.–	–do.–		
D514	42 00 00 iF 00 00 40	–do.–	–do.–		
D515	42 00 00 iF 00 00 40	–do.–	–do.–		
D516	42 00 00 iF 00 00 40	–do.–	–do.–		
D517	42 00 00 iF 00 00 40	–do.–	–do.–		
D518	42 00 00 iF 00 00 40	–do.–	–do.–		
D519	42 00 00 iF 00 00 40	–do.–	–do.–		

*New parts

Ref. No.	Part No.	Description		Markets	Remarks
D520	42 00 00 iF 00 00 40	Diode	1S1555		
C501	42 00 00 FZ 00 06 80	MM Cap.	0.1μF / 250V		
C502	42 00 00 FZ 00 06 80	—do.—	—do.—		
C503	42 00 00 FZ 00 06 80	—do.—	—do.—		
C504	42 00 00 FZ 00 06 80	—do.—	—do.—		
C505	42 00 00 FA 11 31 50	Mylar Cap.	0.0015μF/50V MS (K)		
C506	42 00 00 FA 11 31 50	—do.—	—do.—		
C507	42 00 00 FD 15 13 30	Polystyrene Cap.	33μF / 50V (J)		
C508	42 00 00 FD 15 13 30	—do.—	—do.—		
C511	42 00 00 FF 06 11 20	—do.—	12pF / 125V		
C512	42 00 00 FF 06 11 20	—do.—	—do.—		
C513	42 00 00 FA 11 41 00	Mylar Cap.	0.01μF / 50V MS (K)		
C514	42 00 00 FA 11 41 00	—do.—	—do.—		
C515	42 00 00 FF 06 11 50	Polystyrene Cap.	15pF / 125V		
C516	42 00 00 FF 06 11 50	—do.—	—do.—		
C519	42 00 00 FF 06 07 00	—do.—	7pF / 125V		
C520	42 00 00 FF 06 07 00	—do.—	—do.—		
C523	42 00 00 FA 11 41 00	Mylar Cap.	0.01μF / 50V MS (K)		
C524	42 00 00 FA 11 41 00	—do.—	—do.—		
C525	42 00 00 FA 11 34 70	—do.—	0.0047μF/50V MS (K)		
C526	42 00 00 FA 11 34 70	—do.—	—do.—		
C531	42 00 00 FA 11 34 70	—do.—	—do.—		
C532	42 00 00 FA 11 34 70	—do.—	—do.—		
C533	42 00 00 FZ 00 06 80	MM Cap.	0.1μF / 250V		
C534	42 00 00 FZ 00 06 80	—do.—	—do.—		
C535	42 00 00 FZ 00 06 80	—do.—	—do.—		
C536	42 00 00 FZ 00 06 80	—do.—	—do.—		
R501	42 00 00 HK 15 82 20	Carbon Resistor	220KΩ		
R502	42 00 00 HK 15 82 20	—do.—	—do.—		
R503	42 00 00 HK 15 53 30	—do.—	330Ω		
R504	42 00 00 HK 15 53 30	—do.—	—do.—		
R505	42 00 00 HK 15 62 20	—do.—	2.2KΩ		
R506	42 00 00 HK 15 62 20	—do.—	—do.—		
R507	42 00 00 HK 15 62 20	—do.—	—do.—		
R508	42 00 00 HK 15 62 20	—do.—	—do.—		
R509	42 00 00 HK 15 51 50	—do.—	150Ω		
R510	42 00 00 HK 15 51 50	—do.—	—do.—		
R511	42 00 00 HK 15 42 70	—do.—	27Ω		
R512	42 00 00 HK 15 42 70	—do.—	—do.—		
R513	42 00 00 HK 15 64 70	—do.—	4.7KΩ		
R514	42 00 00 HK 15 64 70	—do.—	—do.—		
R515	42 00 00 HK 15 61 50	—do.—	1.5KΩ		
R516	42 00 00 HK 15 61 50	—do.—	—do.—		
R517	42 00 00 HK 15 52 20	—do.—	220Ω		
R518	42 00 00 HK 15 52 20	—do.—	—do.—		
R519	42 00 00 HK 15 73 90	—do.—	39KΩ		
R520	42 00 00 HK 15 73 90	—do.—	—do.—		
R521	42 00 00 HK 15 62 70	—do.—	2.7KΩ		
R522	42 00 00 HK 15 62 70	—do.—	—do.—		
R523	42 00 00 HK 15 75 60	—do.—	56KΩ		
R524	42 00 00 HK 15 75 60	—do.—	—do.—		
R525	42 00 00 HK 15 72 70	—do.—	27KΩ		
R526	42 00 00 HK 15 72 70	—do.—	—do.—		

*New parts

Ref. No.	Part No.	Description		Markets	Remarks
R527	42 00 00 HK 15 63 30	Carbon Resistor	3.3KΩ		
R528	42 00 00 HK 15 63 30	—do.—	—do.—		
R529	42 00 00 HK 15 74 70	—do.—	47KΩ		
R530	42 00 00 HK 15 74 70	—do.—	—do.—		
R531	42 00 00 HK 15 63 30	—do.—	3.3KΩ		
R532	42 00 00 HK 15 63 30	—do.—	—do.—		
R533	42 00 00 HK 15 52 20	—do.—	220Ω		
R534	42 00 00 HK 15 52 20	—do.—	—do.—		
R535	42 00 00 HK 15 43 90	—do.—	39Ω		
R536	42 00 00 HK 15 43 90	—do.—	—do.—		
R537	42 00 00 HK 15 43 90	—do.—	—do.—		
R538	42 00 00 HK 15 43 90	—do.—	—do.—		
R539	42 00 00 HL 62 64 70	Metal Oxide Resistor	4.7KΩ 2P		
R540	42 00 00 HL 62 64 70	—do.—	—do.—		
R543	42 00 00 HK 15 54 70	Carbon Resistor	470Ω		
R544	42 00 00 HK 15 54 70	—do.—	—do.—		
R545	42 00 00 HK 15 54 70	—do.—	—do.—		
R546	42 00 00 HK 15 54 70	—do.—	—do.—		
R547	42 00 00 HK 15 74 70	—do.—	47KΩ		
R548	42 00 00 HK 15 74 70	—do.—	—do.—		
R549	42 00 00 HK 15 75 60	—do.—	56KΩ		
R550	42 00 00 HK 15 75 60	—do.—	—do.—		
R555	42 00 00 HK 15 61 50	—do.—	1.5KΩ		
R556	42 00 00 HK 15 61 50	—do.—	—do.—		
R557	42 00 00 HK 15 64 70	—do.—	4.7KΩ		
R558	42 00 00 HK 15 64 70	—do.—	—do.—		
R559	42 00 00 HK 15 64 70	—do.—	—do.—		
R560	42 00 00 HK 15 64 70	—do.—	—do.—		
R561	42 00 00 HK 15 61 50	—do.—	1.5KΩ		
R562	42 00 00 HK 15 61 50	—do.—	—do.—		
R563	42 00 00 HL 42 65 60	Metal Oxide Resistor	5.6KΩ 2P		
R564	42 00 00 HL 42 65 60	—do.—	—do.—		
R565	42 00 00 HL 62 65 60	—do.—	—do.—		
R566	42 00 00 HL 62 65 60	—do.—	—do.—		
R567	42 00 00 HK 55 61 50	Carbon Resistor	1.5KΩ		
R568	42 00 00 HK 55 61 50	—do.—	—do.—		
R569	42 00 00 HK 55 61 50	—do.—	—do.—		
R570	42 00 00 HK 55 61 50	—do.—	—do.—		
FR501	42 00 00 HW 19 44 70	Fuse Resistor	70mA		
FR502	42 00 00 HW 19 44 70	—do.—	—do.—		
FR503	42 00 00 HW 19 44 70	—do.—	—do.—		
FR504	42 00 00 HW 19 44 70	—do.—	—do.—		
* VR501	42 00 00 HY 00 06 60	Metal Glaze VR	B-100		
VR502	42 00 00 HY 00 06 60	—do.—	—do.—		
	42 00 00 LB 10 01 10	Connect Pin			
	42 00 00 BB 06 62 80	Thermo Coupler			
*	32 00 00 NA 07 04 60	**FET C. Board**			
IC701	32 00 00 iE 10 11 30	FET	2SK-100C		
IC702	32 00 00 iE 10 11 30	—do.—	—do.—		

*New parts

	Ref. No.	Part No.	Description		Markets	Remarks
*	20	32 00 00 NA 07 04 40	VR & SW C. Board		R, A, E, G, C, B	
		32 00 00 NA 07 13 60	—do.—		U	
	Tr301	42 00 00 iC 23 00 00	Transistor	2SC2300		
	Tr302	42 00 00 iC 23 00 00	—do.—	—do.—		
	Tr303	42 00 00 iC 23 00 00	—do.—	—do.—		
	Tr304	42 00 00 iC 23 00 00	—do.—	—do.—		
	Tr313	42 00 00 iA 09 98 00	—do.—	2SA998		
	Tr314	42 00 00 iA 09 98 00	—do.—	—do.—		
	Tr315	42 00 00 iA 09 98 00	—do.—	—do.—		
	Tr316	42 00 00 iA 09 98 00	—do.—	—do.—		
*	C301	42 00 00 FZ 00 12 60	Electrolytic Cap.	220μF / 6.3V UKN		
	C302	42 00 00 FZ 00 12 60	—do.—	—do.—		
	C303	42 00 00 FZ 00 12 60	—do.—	—do.—		
	C304	42 00 00 FZ 00 12 60	—do.—	—do.—		
*	C305	42 00 00 FZ 00 12 50	—do.—	47μF / 6.3V UKN		
	C306	42 00 00 FZ 00 12 50	—do.—	—do.—		
	C307	42 00 00 FZ 00 12 50	—do.—	—do.—		
	C308	42 00 00 FZ 00 12 50	—do.—	—do.—		
*	C309	42 00 00 FJ 12 91 00	—do.—	1000μF / 10V		
	C310	42 00 00 FJ 12 91 00	—do.—	—do.—		
	C311	42 00 00 FJ 12 91 00	—do.—	—do.—		
	C312	42 00 00 FJ 12 91 00	—do.—	—do.—		
	C313	42 00 00 FD 15 23 30	Polystyrene Cap.	330pF / 50V (J)		
	C314	42 00 00 FD 15 23 30	—do.—	—do.—		
*	C315	42 00 00 FD 21 25 60	—do.—	560pF / 50V (K)		
	C316	42 00 00 FD 21 25 60	—do.—	—do.—		
	C317	42 00 00 FD 21 25 60	—do.—	—do.—		
	C318	42 00 00 FD 21 25 60	—do.—	—do.—		
	R301	42 00 00 HK 15 61 00	Carbon Resistor	1KΩ		
	R302	42 00 00 HK 15 61 00	—do.—	—do.—		
	R303	42 00 00 HK 15 71 00	—do.—	10KΩ		
	R304	42 00 00 HK 15 71 00	—do.—	—do.—		
	R305	42 00 00 HK 15 64 70	—do.—	4.7KΩ		
	R306	42 00 00 HK 15 64 70	—do.—	—do.—		
	R307	42 00 00 HK 15 71 00	—do.—	10KΩ		
	R308	42 00 00 HK 15 71 00	—do.—	—do.—		
	R309	42 00 00 HK 15 68 20	—do.—	8.2KΩ		
	R310	42 00 00 HK 15 68 20	—do.—	—do.—		
	R311	42 00 00 HK 15 68 20	—do.—	—do.—		
	R312	42 00 00 HK 15 68 20	—do.—	—do.—		
	R313	42 00 00 HK 15 68 20	—do.—	—do.—		
	R314	42 00 00 HK 15 68 20	—do.—	—do.—		
	R315	42 00 00 HK 15 66 80	—do.—	6.8KΩ		
	R316	42 00 00 HK 15 66 80	—do.—	—do.—		
	R317	42 00 00 HK 15 51 80	—do.—	180Ω		
	R318	42 00 00 HK 15 51 80	—do.—	—do.—		
	R319	42 00 00 HK 15 32 20	—do.—	2.2Ω		
	R320	42 00 00 HK 15 32 20	—do.—	—do.—		
	R321	42 00 00 HK 15 32 20	—do.—	—do.—		
	R322	42 00 00 HK 15 32 20	—do.—	—do.—		
	R327	42 00 00 HK 15 32 20	—do.—	—do.—		
	R328	42 00 00 HK 15 32 20	—do.—	—do.—		
	R329	42 00 00 HK 15 32 20	—do.—	—do.—		

*New parts

Ref. No.	Part No.	Description		Markets	Remarks
R330	42 00 00 HK 15 32 20	Carbon Resistor	2.2Ω		
R335	42 00 00 HK 15 51 80	—do.—	180Ω		
R336	42 00 00 HK 15 51 80	—do.—	—do.—		
R337	42 00 00 HK 15 68 20	—do.—	8.2KΩ		
R338	42 00 00 HK 15 68 20	—do.—	—do.—		
R339	42 00 00 HK 15 68 20	—do.—	—do.—		
R340	42 00 00 HK 15 68 20	—do.—	—do.—		
R341	42 00 00 HK 15 68 20	—do.—	—do.—		
R342	42 00 00 HK 15 68 20	—do.—	—do.—		
R343	42 00 00 HK 15 66 80	—do.—	6.8KΩ		
R344	42 00 00 HK 15 66 80	—do.—	—do.—		
R345	42 00 00 HK 15 52 20	—do.—	220Ω		
R346	42 00 00 HK 15 52 20	—do.—	—do.—		
R347	42 00 00 HK 15 54 70	—do.—	470Ω		
R348	42 00 00 HK 15 54 70	—do.—	—do.—		
R349	42 00 00 HK 15 34 70	—do.—	4.7Ω		
VR301	42 00 00 HT 41 00 10	Variable Resistor	10KΩ		
VR302	42 00 00 HT 41 00 10	—do.—	—do.—		
VR303	42 00 00 HY 00 06 50	—do.—	—do.—		
SW301	42 00 00 KA 80 04 70	Push Switch for Speaker			
SW302	42 00 00 KA 80 04 80	Push Switch for Disk			
PJ301	42 00 00 LB 10 04 40	Pin-Jack	1P SQ-3056-2		
PJ302	42 00 00 LB 10 04 40	—do.—	—do.—		
	42 00 00 LA 00 21 10	Lapping Pin Type I	2P P = 5		
*	42 00 00 LB 50 02 20	Miniature Connecter	5P		
	42 00 00 LA 00 24 40	Lapping Pin Type U	3P P = 5		
	42 00 00 LA 00 21 20	Lapping Pin Type L	3P P = 5		
	42 00 00 LB 60 17 80	Miniature Connecter			
* 21	32 00 00 NA 07 13 70	**Tone Control C. Board**		U	
	32 00 00 NA 07 14 70	—do.—		R, A, E, G, C, B	
Tr601	42 00 00 iA 06 73 10	Transistor	2SA673A, C, D		
Tr602	42 00 00 iA 06 73 10	—do.—	—do.—		
Tr603	42 00 00 iA 06 73 10	—do.—	—do.—		
Tr604	42 00 00 iA 06 73 10	—do.—	—do.—		
Tr605	42 00 00 iC 17 75 00	—do.—	2SC1775		
Tr606	42 00 00 iC 17 75 00	—do.—	—do.—		
Tr607	42 00 00 iC 17 75 00	—do.—	—do.—		
Tr608	42 00 00 iC 17 75 00	—do.—	—do.—		
Tr609	42 00 00 iE 10 05 50	FET	2SK68A		
Tr610	42 00 00 iE 10 05 50	—do.—	—do.—		
Tr611	42 00 00 iE 10 05 50	—do.—	—do.—		
Tr612	42 00 00 iE 10 05 50	—do.—	—do.—		
Tr613	42 00 00 iA 07 77 30	Transistor	2SA777Q, R		
Tr614	42 00 00 iA 07 77 30	—do.—	—do.—		
C601	42 00 00 FA 15 44 70	Mylar Cap.	0.047μF / 50V (J)		
C602	42 00 00 FA 15 44 70	—do.—	—do.—		
C603	42 00 00 FA 15 44 70	—do.—	—do.—		
C604	42 00 00 FA 15 44 70	—do.—	—do.—		
C605	42 00 00 FD 15 21 00	Polystyrene Cap.	100pF / 50V (J)		
C606	42 00 00 FD 15 21 00	—do.—	—do.—		
C607	42 00 00 FD 15 21 00	—do.—	—do.—		
C608	42 00 00 FD 15 21 00	—do.—	—do.—		

* New parts

Ref. No.	Part No.	Description	Markets	Remarks
C609	42 00 00 FF 06 12 20	Polystrene Cap. 22pF / 125V		
C610	42 00 00 FF 06 12 20	—do.— —do.—		
C611	42 00 00 FM 22 63 30	Bi-Polar Electrolytic Cap. 3.3μF / 25V		
C612	42 00 00 FM 22 63 30	—do.— —do.—		
C613	42 00 00 FJ 12 72 20	Electrolytic Cap. 22μF / 10V		
C614	42 00 00 FJ 12 72 20	—do.— —do.—		
C615	42 00 00 FA 11 45 60	Mylar Cap. 0.056μF /50V (K)		
C616	42 00 00 FA 11 45 60	—do.— —do.—		
C617	42 00 00 FA 11 44 70	—do.— 0.047μF /50V (K)		
C618	42 00 00 FA 11 44 70	—do.— —do.—		
C631	42 00 00 FA 11 41 00	—do.— 0.01μF / 50V (K)		
C632	42 00 00 FA 11 41 00	—do.— —do.—		
C633	42 00 00 FA 11 41 00	—do.— —do.—		
R601	42 00 00 HK 15 81 80	Carbon Resistor 180KΩ		
R602	42 00 00 HK 15 81 80	—do.— —do.—		
R603	42 00 00 HK 15 83 90	—do.— 390KΩ		
R604	42 00 00 HK 15 83 90	—do.— —do.—		
R605	42 00 00 HK 15 52 20	—do.— 220Ω		
R606	42 00 00 HK 15 52 20	—do.— —do.—		
R607	42 00 00 HK 15 52 20	—do.— —do.—		
R608	42 00 00 HK 15 52 20	—do.— —do.—		
R609	42 00 00 HK 15 52 20	—do.— —do.—		
R610	42 00 00 HK 15 52 20	—do.— —do.—		
R611	42 00 00 HK 15 75 60	—do.— 56KΩ		
R612	42 00 00 HK 15 75 60	—do.— —do.—		
R613	42 00 00 HK 15 71 20	—do.— 12KΩ		
R614	42 00 00 HK 15 71 20	—do.— —do.—		
R615	42 00 00 HK 15 63 90	—do.— 3.9KΩ		
R616	42 00 00 HK 15 63 90	—do.— —do.—		
R617	42 00 00 HK 15 63 90	—do.— —do.—		
R618	42 00 00 HK 15 63 90	—do.— —do.—		
R619	42 00 00 HK 15 44 70	—do.— 47Ω		
R620	42 00 00 HK 15 44 70	—do.— —do.—		
R621	42 00 00 HK 15 81 00	—do.— 100KΩ		
R622	42 00 00 HK 15 81 00	—do.— —do.—		
R623	42 00 00 HK 15 71 00	—do.— 10KΩ		
R624	42 00 00 HK 15 71 00	—do.— —do.—		
R625	42 00 00 HK 15 71 00	—do.— —do.—		
R626	42 00 00 HK 15 71 00	—do.— —do.—		
R627	42 00 00 HK 15 81 00	—do.— 100KΩ		
R628	42 00 00 HK 15 81 00	—do.— —do.—		
R629	42 00 00 HK 15 66 80	—do.— 6.8KΩ		
R630	42 00 00 HK 15 66 80	—do.— —do.—		
R631	42 00 00 HK 15 66 80	—do.— —do.—		
R632	42 00 00 HK 15 66 80	—do.— —do.—		
R633	42 00 00 HK 15 61 00	—do.— 1KΩ		
R634	42 00 00 HK 15 61 00	—do.— —do.—		
R635	42 00 00 HK 15 92 20	—do.— 2.2MΩ		
R636	42 00 00 HK 15 92 20	—do.— —do.—		
R637	42 00 00 HK 15 52 70	—do.— 270Ω		
R638	42 00 00 HK 15 52 70	—do.— —do.—		
R639	42 00 00 HM 52 53 30	Cement Molded Resistor 2P 330Ω		
R640	42 00 00 HM 52 53 30	—do.— —do.—		

*New parts

Ref. No.	Part No.	Description	Markets	Remarks
VR601	42 00 00 HS 32 04 20	Bass VR 30KB x 2		
VR602	42 00 00 HS 32 04 80	Treble VR 10KW x 2		
TK601	42 00 00 LB 30 03 90	Headphone Jack LJ213-1-2		
	42 00 00 LB 30 06 40	—do.—		
	42 00 00 LA 00 21 10	Wire Lapping Terminal 2P P = 5		
	42 00 00 LA 00 21 20	—do.— 3P —do.—		
	32 00 00 BB 06 63 40	Sealed Plate		
	42 00 00 CB 07 78 60	Sealed Cap.		
* 22	32 00 00 NA 07 04 30	**Pre C. Board**	R, A, E, G, C, B	
	32 00 00 NA 07 13 50	—do.—	U	
Tr401	42 00 00 iA 06 73 10	Transistor 2SA673A, C, D		
Tr402	42 00 00 iA 06 73 10	—do.— —do.—		
Tr403	42 00 00 iA 06 73 10	—do.— —do.—		
Tr404	42 00 00 iA 06 73 10	—do.— —do.—		
Tr405	42 00 00 iC 17 75 00	—do.— 2SC1775		
Tr406	42 00 00 iC 17 75 00	—do.— —do.—		
Tr407	42 00 00 iC 17 75 00	—do.— —do.—		
Tr408	42 00 00 iC 17 75 00	—do.— —do.—		
Tr409	42 00 00 iA 08 72 00	—do.— 2SA872		
Tr410	42 00 00 iA 08 72 00	—do.— —do.—		
Tr411	42 00 00 iA 09 14 50	—do.— 2SA914 S, T, Q, R		
Tr412	42 00 00 iA 09 14 50	—do.— —do.—		
* Tr413	42 00 00 iC 19 53 50	—do.— 2SC1953 S, T, Q, R		
Tr414	42 00 00 iC 19 53 50	—do.— —do.—		
Tr415	42 00 00 iC 19 53 50	—do.— —do.—		
Tr416	42 00 00 iC 19 53 50	—do.— —do.—		
* Tr417	42 00 00 iA 09 14 50	—do.— 2SA914 S, T, Q, R		
Tr418	42 00 00 iA 09 14 50	—do.— —do.—		
IC401	42 00 00 iE 10 11 20	FET 2SK 100		
IC402	42 00 00 iE 10 11 20	—do.— —do.—		
D401	32 00 00 iF 00 07 70	Varistor VD1212		
D402	32 00 00 iF 00 07 70	—do.— —do.—		
D403	42 00 00 iF 00 00 40	Diode 1S1555		
D405	42 00 00 iF 00 05 70	Zener Diode HZ-6C		
D406	42 00 00 iF 00 05 70	—do.— —do.—		
C401	42 00 00 FA 11 43 30	Mylar Cap. 0.033μF / 50V		
C402	42 00 00 FA 11 43 30	—do.— —do.—		
C403	42 00 00 FD 15 21 00	Polystyrene Cap. 100pF / 50V (J)		
C404	42 00 00 FD 15 21 00	—do.— —do.—		
C405	42 00 00 FT 17 45 60	0.056μF / 100V (F)		
C406	42 00 00 FT 17 45 60	—do.— —do.—		
C407	42 00 00 FT 17 41 50	—do.— 0.015μF / 100V (F)		
C408	42 00 00 FT 17 41 50	—do.— —do.—		
C409	42 00 00 FA 11 31 00	Mylar Cap. 0.001μF / 50V MS (K)		
C410	42 00 00 FA 11 31 00	—do.— —do.—		
C411	42 00 00 FF 06 13 30	Polystyrene Cap. 33pF / 125V		
* C412	42 00 00 FF 06 13 30	—do.— —do.—		
C413	42 00 00 FA 11 41 00	Mylar Cap. 0.1μF / 50V		
C414	42 00 00 FA 11 41 00	—do.— —do.—		
C415	42 00 00 FC 10 61 00	MM Cap. 1μF / 100V		
C416	42 00 00 FC 10 61 00	—do.— —do.—		
C417	42 00 00 FA 11 41 50	Mylar Cap. 0.015μF / 50V		

*New parts

Ref. No.	Part No.	Description		Markets	Remarks
C418	42 00 00 FA 11 41 50	Mylar Cap.	0.015μF / 50V		
C419	42 00 00 FJ 16 61 00	Electrolytic Cap.	1μF / 50V		
C420	42 00 00 FJ 16 61 00	—do.—	—do.—		
C421	42 00 00 FJ 16 61 00	—do.—	—do.—		
C422	42 00 00 FJ 16 61 00	—do.—	—do.—		
C423	42 00 00 FD 15 21 00	Polystyrene Cap.	100pF / 50V (J)		
C424	42 00 00 FD 15 21 00	—do.—	—do.—		
C425	42 00 00 FA 11 32 20	Mylar Cap.	0.0022μF/50V		
C426	42 00 00 FA 11 32 20	—do.—	—do.—		
R401	42 00 00 HK 55 68 20	Carbon Resistor	8.2KΩ ELS25		
R402	42 00 00 HK 55 68 20	—do.—	—do.—		
R403	42 00 00 HK 55 51 00	—do.—	100Ω ELS25		
R404	42 00 00 HK 55 51 00	—do.—	—do.—		
R405	42 00 00 HK 55 41 20	—do.—	12Ω ELS25		
R406	42 00 00 HK 55 41 20	—do.—	—do.—		
R407	42 00 00 HK 55 82 20	—do.—	220KΩ ELS25		
R408	42 00 00 HK 55 82 20	—do.—	—do.—		
R409	42 00 00 HK 55 51 50	—do.—	150Ω ELS25		
R410	42 00 00 HK 55 51 50	—do.—	—do.—		
R411	42 00 00 HK 55 51 50	—do.—	—do.—		
R412	42 00 00 HK 55 51 50	—do.—	—do.—		
R413	42 00 00 HK 55 72 70	—do.—	27KΩ ELS25		
R414	42 00 00 HK 55 72 70	—do.—	—do.—		
R415	42 00 00 HK 55 47 20	—do.—	4.7KΩ		
R416	42 00 00 HK 55 47 20	—do.—	—do.—		
R417	42 00 00 HK 55 41 20	—do.—	12Ω ELS25		
R418	42 00 00 HK 55 41 20	—do.—	—do.—		
R419	42 00 00 HK 55 68 20	—do.—	6.8KΩ ELS25		
R420	42 00 00 HK 55 68 20	—do.—	—do.—		
R421	42 00 00 HK 55 68 20	—do.—	—do.—		
R422	42 00 00 HK 55 68 20	—do.—	—do.—		
* R423	42 00 00 HU 07 47 50	Metal Film Resistor	75Ω RE35		
R424	42 00 00 HU 07 47 50	—do.—	—do.—		
R425	42 00 00 HU 07 75 60	—do.—	56KΩ		
* R426	42 00 00 HU 07 75 60	—do.—	—do.—		
* R427	42 00 00 HU 07 64 70	—do.—	4.7KΩ		
R428	42 00 00 HU 07 64 70	—do.—	—do.—		
R429	42 00 00 HK 55 64 70	Carbon Resistor	4.7KΩ ELS25		
R430	42 00 00 HK 55 64 70	—do.—	—do.—		
R431	42 00 00 HK 55 44 70	—do.—	47Ω ELS25		
R432	42 00 00 HK 55 44 70	—do.—	—do.—		
R433	42 00 00 HK 55 53 30	—do.—	330Ω ELS25		
R434	42 00 00 HK 55 53 30	—do.—	—do.—		
R435	42 00 00 HK 55 73 30	—do.—	33KΩ ELS25		
R436	42 00 00 HK 55 73 30	—do.—	—do.—		
R437	42 00 00 HK 55 51 20	—do.—	120Ω ELS25		
R438	42 00 00 HK 55 51 20	—do.—	—do.—		
R439	42 00 00 HK 55 51 00	—do.—	100Ω ELS25		
R440	42 00 00 HK 55 51 00	—do.—	—do.—		
R441	42 00 00 HK 55 43 30	—do.—	33Ω ELS25		
R442	42 00 00 HK 55 43 30	—do.—	—do.—		
R443	42 00 00 HK 55 43 30	—do.—	—do.—		
R444	42 00 00 HK 55 43 30	—do.—	—do.—		

*New parts

Ref. No.	Part No.	Description			Markets	Remarks
R445	42 00 00 HK 55 51 00	Carbon Resistor	100Ω	ELS25		
R446	42 00 00 HK 55 51 00	—do.—	—do.—			
R447	42 00 00 HK 55 81 00	—do.—	100KΩ	ELS25		
R448	42 00 00 HK 55 81 00	—do.—	—do.—			
R449	42 00 00 HK 15 61 00	—do.—	1KΩ	FCR25		
R450	42 00 00 HK 15 61 00	—do.—	—do.—			
R451	42 00 00 HK 15 62 70	—do.—	2.7KΩ			
R452	42 00 00 HK 15 62 70	—do.—				
R453	42 00 00 HK 15 54 70	—do.—	470Ω	FCR25		
R454	42 00 00 HK 15 54 70	—do.—	—do.—			
R455	42 00 00 HK 55 51 00	—do.—	100Ω	ELS25		
R456	42 00 00 HK 55 51 00	—do.—	—do.—			
R457	42 00 00 HK 55 46 80	—do.—	68Ω	ELS25		
R458	42 00 00 HK 55 46 80	—do.—	—do.—			
R801	42 00 00 HK 15 81 80	—do.—	180KΩ	FCR25		
R802	42 00 00 HK 15 81 80	—do.—	—do.—			
VR401	42 00 00 HY 00 05 40	Metal Glaze VR	B-100	CR-19R		
VR402	42 00 00 HY 00 05 40	—do.—	—do.—			
FR401	42 00 00 HW 19 44 70	Fuse Resistor	70mA／47Ω		R, A, E, G, C, B	
FR402	42 00 00 HW 19 44 70	—do.—	—do.—		R, A, E, G, C, B	
FR403	42 00 00 HW 19 44 70	—do.—	—do.—		R, A, E, G, C, B	
FR404	42 00 00 HW 19 44 70	—do.—	—do.—		R, A, E, G, C, B	
FR401	42 00 00 HW 29 44 70	—do.—	—do.—		U	
FR402	42 00 00 HW 29 44 70	—do.—	—do.—		U	
FR403	42 00 00 HW 29 44 70	—do.—	—do.—		U	
FR404	42 00 00 HW 29 44 70	—do.—	—do.—		U	
PJ801	42 00 00 LB 20 12 60	Pin-Jack	2P			
PJ802	42 00 00 LB 20 12 60	—do.—	—do.—			
PJ803	42 00 00 LB 20 12 60	—do.—	—do.—			
PJ804	42 00 00 LB 10 04 40	—do.—		SQ-3056-2		
PJ805	42 00 00 LB 10 04 40	—do.—		—do.—		
PJ806	42 00 00 LB 10 04 40	—do.—		—do.—		
PJ807	42 00 00 LB 10 04 40	—do.—		—do.—		
SW401	42 00 00 KA 80 04 60	Push Switch				
RY401	42 00 00 KC 00 03 00	Read Relay				
	42 00 00 LA 00 20 30	Wire Lapping Terminal	4P	P = 5		
	42 00 00 LA 00 20 40	—do.—	5P	P = 5		
	42 00 00 LA 00 21 10	—do.—	2P	P = 5		
	42 00 00 LA 00 21 20	—do.—	3P	P = 5		
	42 00 00 LB 10 01 10	Connect Pin		RT0.7 — 1.3A		
*	42 00 00 LB 10 04 40	Pin-Jack		SQ-3056-2		
*	42 00 00 LB 50 02 20	Miniature Connecter	5P			
*	42 00 00 LB 60 21 50	—do.—	7P			
	32 00 00 BB 06 62 40	Sealed Plate				
	32 00 00 BB 06 64 30	—do.—				
	42 00 00 CA 06 80 20	—do.—				
	42 00 00 LB 20 12 70	Cartridge Load	47KΩ			
	42 00 00 LB 20 13 50	—do.—	68KΩ			

* New parts

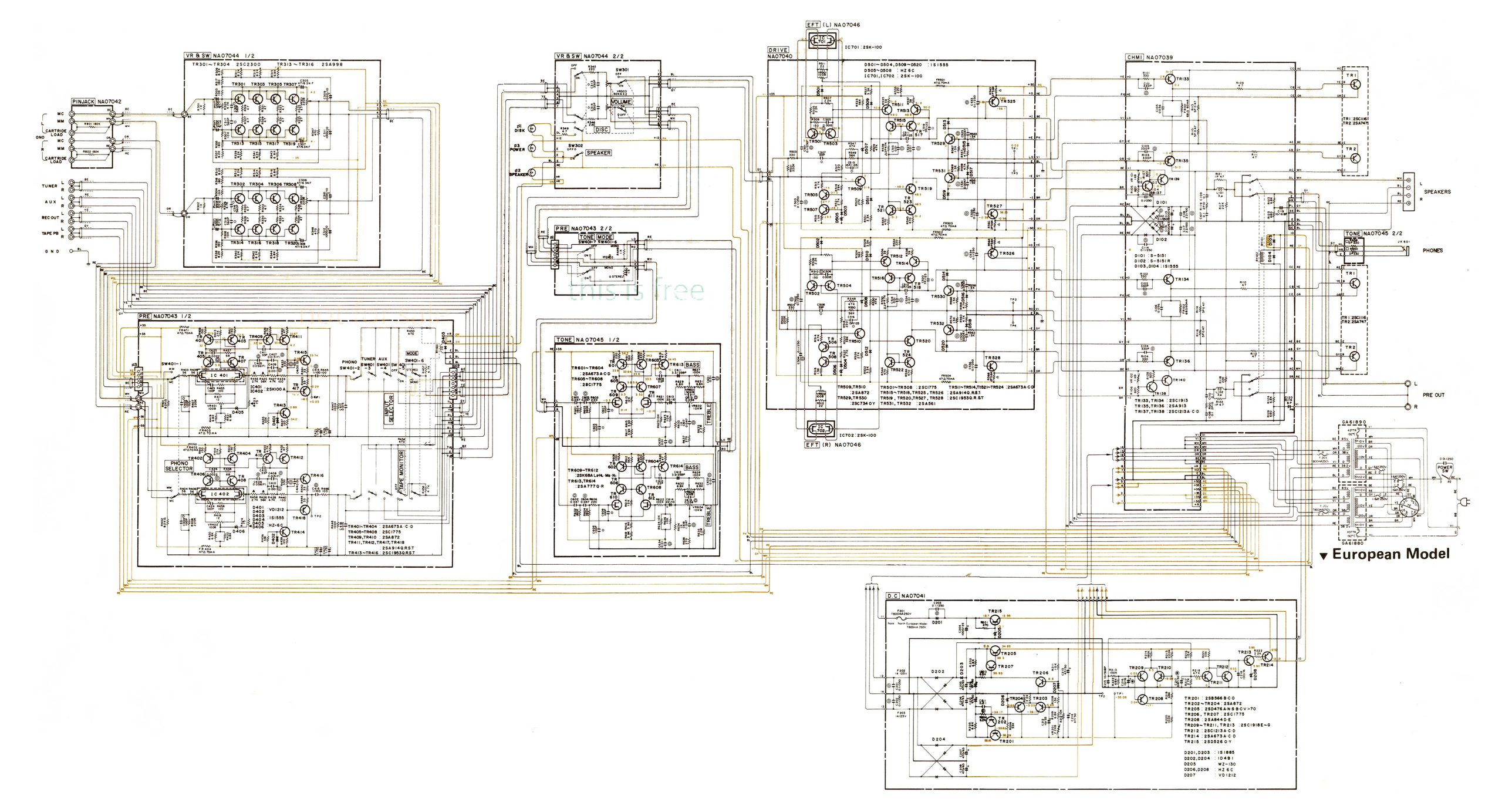
VR & SW NA07044 1/2
VR & SW NA07044 2/2
PINJACK NA07042
PRE NA07043 1/2
PRE NA07043 2/2
TONE NA07045 1/2
TONE NA07045 2/2
DRIVE NA07040
EFT (L) NA07046
EFT (R) NA07046
CHMI NA07039
D.C NA07041
INPUT SELECTOR
TAPE MONITOR
PHONO SELECTOR
VOLUME
DISC
SPEAKER
BASS
TREBLE
SPEAKERS
PHONES
PRE OUT
POWER SW
GA61880
▼ European Model