SERVICE MANUAL

YP-D6

STEREO TURNTABLE

SINCE 1887 YAMAHA

NIPPON GAKKI CO., LTD. HAMAMATSU, JAPAN

① 20 Printed in Japan 3・77

www.hifiengine.com

CONTENTS

SPECIFICATIONS 1
INTERNAL VIEW
1. TOP VIEW 2
2. BOTTOM VIEW 2
PARTIAL DISASSEMBLY 3
AUTO-RETURN MECHANISM OPERATION
1. PLAY OPERATION 4
2. AUTO-RETURN OPERATION 4
3. AUTO-CUT OPERATION 4
PRINTED CIRCUIT BOARD
1. POWER CIRCUIT BOARD 6
2. SERVO CIRCUIT BOARD 6
SCHEMATIC DIAGRAM 7
LINE VOLTAGE CONVERSION 8
WIRING 9

SPECIFICATIONS

■ **TURN TABLE**	ADC 1.6 kg, with stroboscope
Drive System	Direct drive
Float System	Large-size special rubber insulator
Automation Mechanism	Auto-return, auto-cut
Motor	DC 12 poles, 24 slots, brushless DD motor
Speeds	33-1/3, 45 rpm 2 speeds
Speeds Fine Control	±3%
S/N Ratio	Not less than 60 dB (IEC-B) Not less than 70 dB (DIN-B)
Wow & Flutter	Not more than 0.035% W.R.M.S. (IEC)
■ **TONEARM**	S-shaped static balance pipe arm
Effective Length	221.6 mm
Overhang	16.6 mm
Cartridge Weight covering Range	4 ~ 15 gr
Tracking Force Indication	Direct reading by counter ring. 0.5 gr step, 3 gr per turn
Head Shell	ADC shell (tilting adjustable)
Cartridge	Null
I.F.C	Spring & lever system
■ **GENERAL**	
Rated Voltage and Frequency	AC 120V 60Hz AC 220V 50Hz AC 240V 50Hz
Permissible Voltage Range	Rated Voltage ±10%
Power Consumption	4W
Dimensions (WxHxD)	470 x 358.5 x 156 m/m 18.5" x 14.12" x 6.14"
Weight	10.6 kg 23.42 lbs
Outer Covering	Panel: High density particle board 18t (backer lined),, silver matallic finished Main body: RVC R/C plywood, century wall nut

www.hifiengine.com

INTERNAL VIEW

1. TOP VIEW

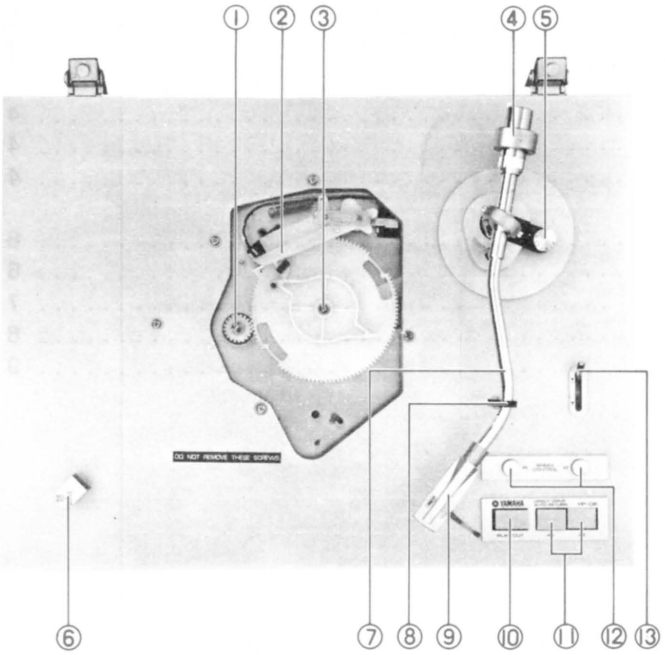

❶ TURN TABLE CENTER SHAFT
❷ STOPPER PLATE A
❸ FLAT GEAR
❹ MAIN WEIGHT
❺ INSIDE FORCE CANCELAR
❻ STROBOSCOPE
❼ TONE ARM
❽ ARM REST
❾ HEAD SHELL
❿ PLAY/CUT SWITCH
⓫ SPEED SELECTOR SWITCHES
⓬ SPEED CONTROL KNOBS
⓭ ARM LIFTER

2. BOTTOM VIEW

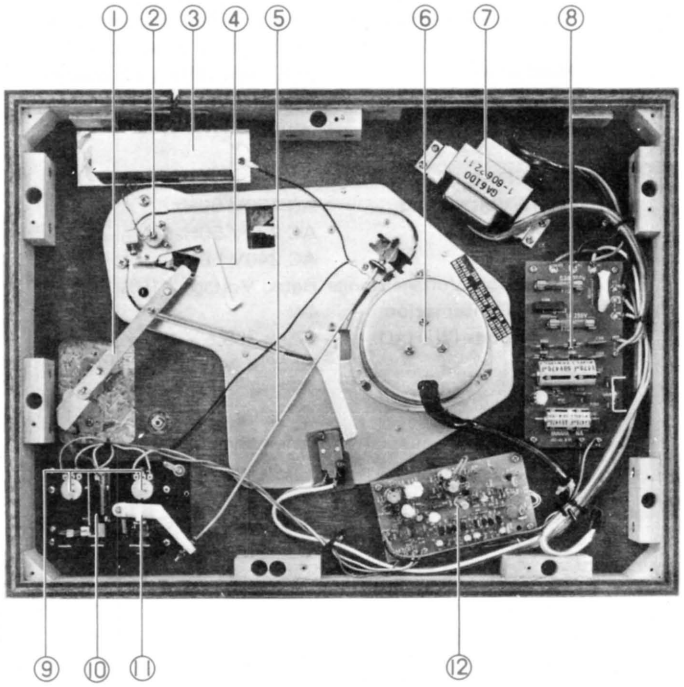

❶ ARM LIFTER BAR
❷ TONE ARM CENTER
❸ SHIELD COVER
❹ CROSS ARM
❺ PLAY/CUT ROD
❻ MOTOR
❼ POWER TRANSFORMER
❽ POWER CIRCUIT BOARD
❾ SPEED CONTROL VR
❿ SPEED SELECTOR SWITCH
⓫ PLAY/CUT LINK ARM
⓬ SERVO CIRCUIT BOARD

www.hifiengine.com

PARTIAL DISASSEMBLY

1. REAR BOARD REMOVAL

Remove screws 1 ~ 11 as shown in Photo 1, then remove the rear board.

2. POWER CIRCUIT BOARD REMOVAL

a. Remove the rear board (refer to step 1).
b. Remove screws 1 ~ 4 and lead wire as shown in Photo 2 and take them off.

3. SERVO CIRCUIT BOARD REMOVAL

a. Remove the rear board (refer to step 1).
b. Remove screws 5 ~ 8 and lead wire as shown in Photo 2 and take them off.

4. CONTROL PANEL REMOVAL

a. Remove the rear board (refer step 1).
b. After removing screws 9 ~ 12 in Photo 2, take off the SPEED CONTROL knob on the upper part of the panel by pulling it out.

5. POWER TRANSFORMER REMOVAL

a. Remove the rear board (refer step 1).
b. Remove screws 13 ~ 16 and lead wire in Photo 2 and take them out.

6. TONEARM REMOVAL

a. Remove the rear board (refer step 1).
b. Remove screws 17 and 18, them take off the shield cover.
c. Disconnect the soldering of the output lead wire from the tonearm.
Color discrimination in this case is as shown in Figure 1.
d. Tonearm is taken off by removing screws 1 ~ 3 in Figure 1, but previously loosen set screws 4, 5 for the auto-return lever.
*With regard to the mechanism of auto-return, refer to Figure 2.

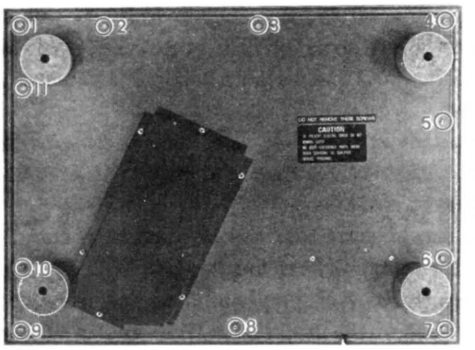

Photo 1

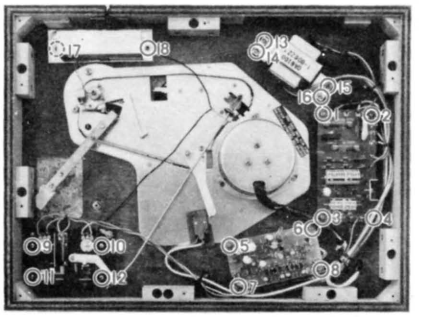

Photo 2

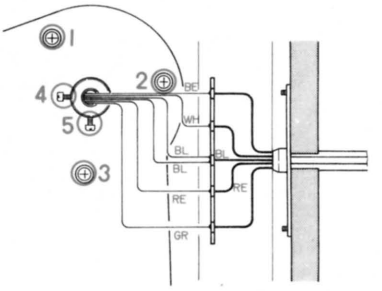

Fig. 1

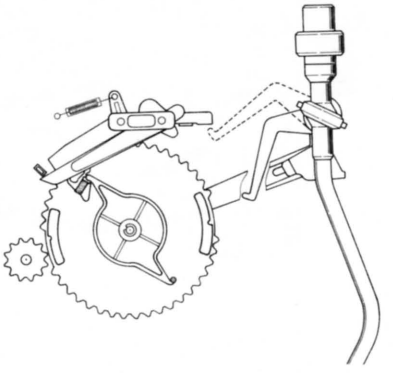

Fig. 2

www.hifiengine.com

AUTO-RETURN MECHANISM OPERATION

PLAY OPERATION

1. By the depressing Play/Cut switch (A), the stop-pin (C) of the flat gear (E) is released by the stop-plate (B), then the flat gear moves in the direction of the arrow.
   Simultaneously, the push lever (D) operates the microswitch (D), then the motor is energized and begins to rotate.
2. The center-shaft gear (K) positioned at the center of the turn-table makes the flat gear (E) to rotate simultaneously with the beginning of motor rotation and, by means of the stop plate (B), it engages the stop-pin (H) and stops the flat gear (E).
3. Simultaneously with the beginning of motor rotation, the slide-base (F) moves in the direction of the arrow, lowers the arm lifter (L) and sets the arm down on the disk.

AUTO-RETURN OPERATION

1. Upon entering of the cartridge needle into the finishing portion of the disk, the rotary arm (F) of the arm base pushes the stopper (B) and pulls the stopper (A) out to the center portion.
   Then, by the rotation of the turn-table, the pin (D) positioned on the lower surface of the turn-table opens the stopper (A) further, and the stop-plate (G) releases the stop-pin (H) of the flat gear (E).
2. Upon the further rotation of the flat gear (E) by the center-shaft gear (K) due to motor rotation, the slide-base (C) returns to its original position, simultaneously lifts the arm-lifter (L) and returns the arm to the armrest.
3. Simultaneously, the push-lever (I) de-energizes the microswitch (J), then the motor stops its rotation.

AUTO-CUT OPERATION

1. When the disk is required to stop during its performance, depress the play/cut switch (A), then the stopper (B) releases the stop-pin (H) of the flat gear (E). Then the tone-arm is automatically returned to the arm-rest in the same sequence as Auto-Return and the motor stops its rotation.

1. PLAY OPERATION

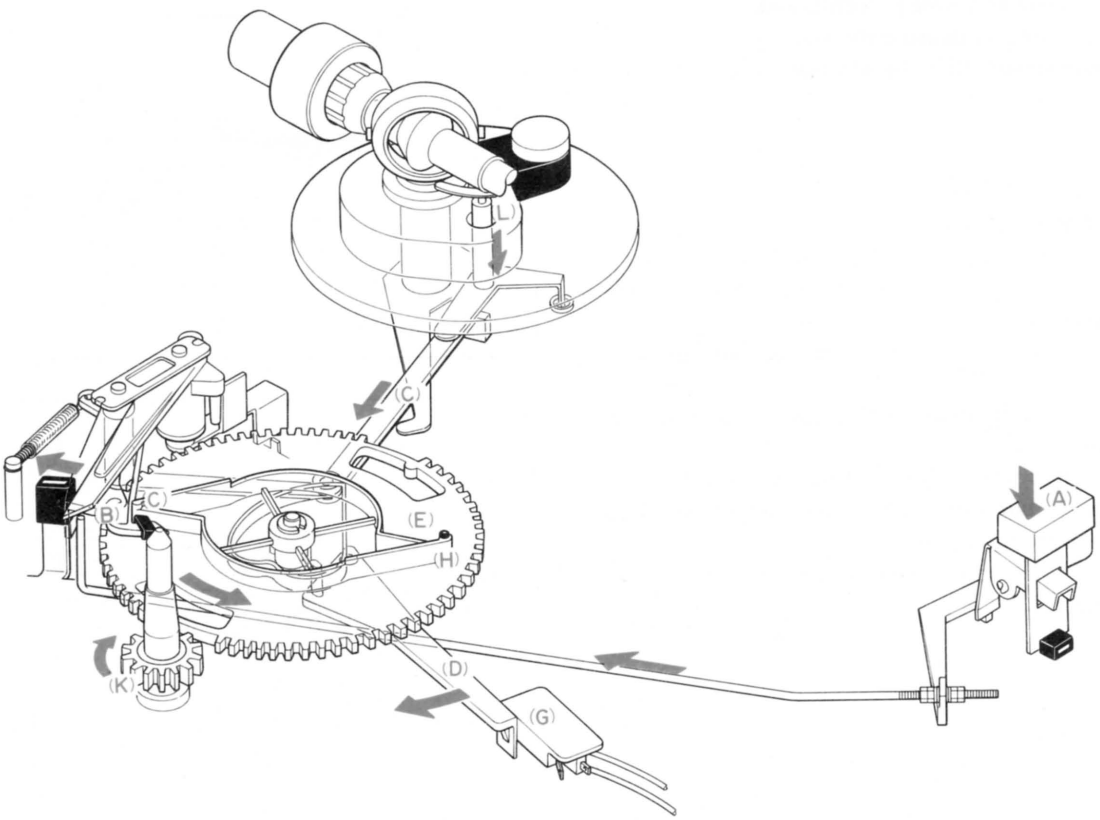

www.hifiengine.com

2. AUTO-RETURN OPERATION

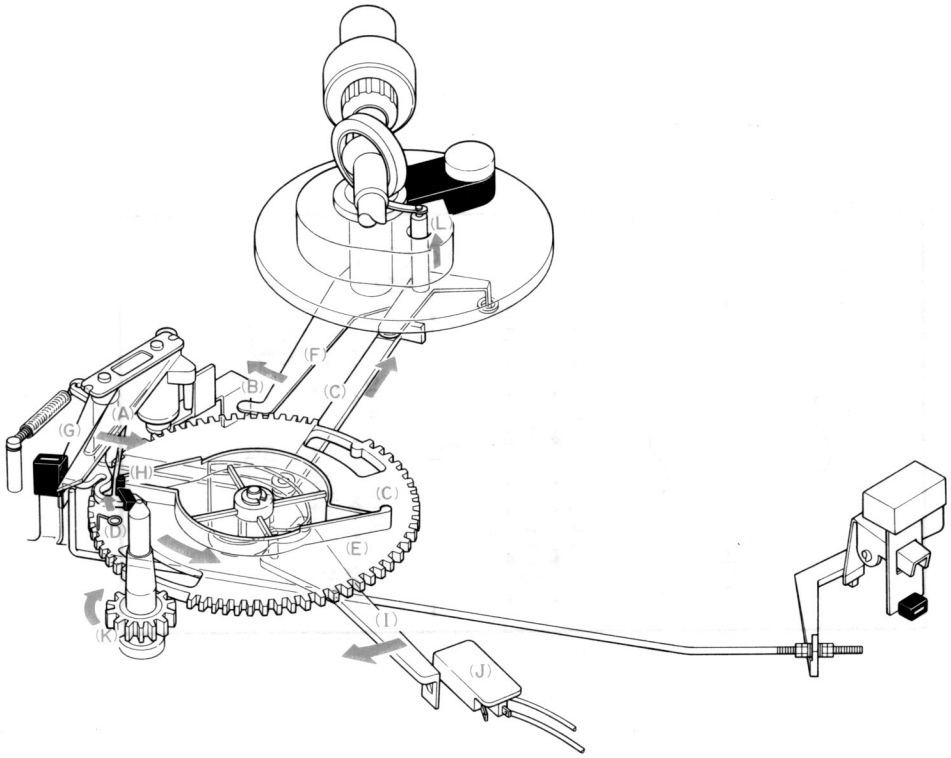

3. AUTO-CUT OPERATION

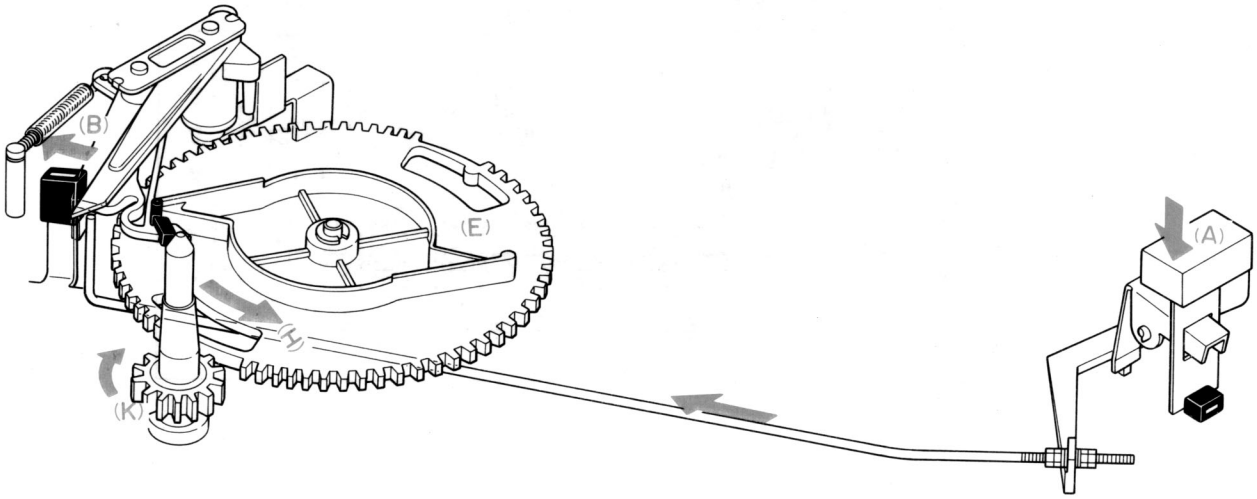

www.hifiengine.com

PRINTED CIRCUIT BOARD

1. POWER CIRCUIT BOARD

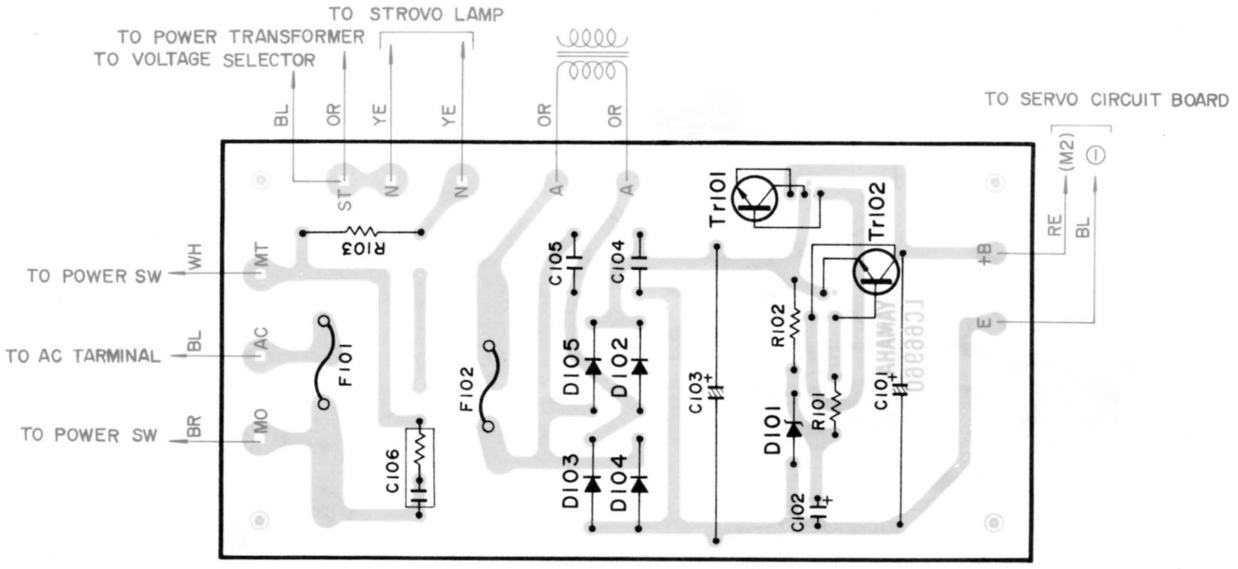

2. SERVO CIRCUIT BOARD

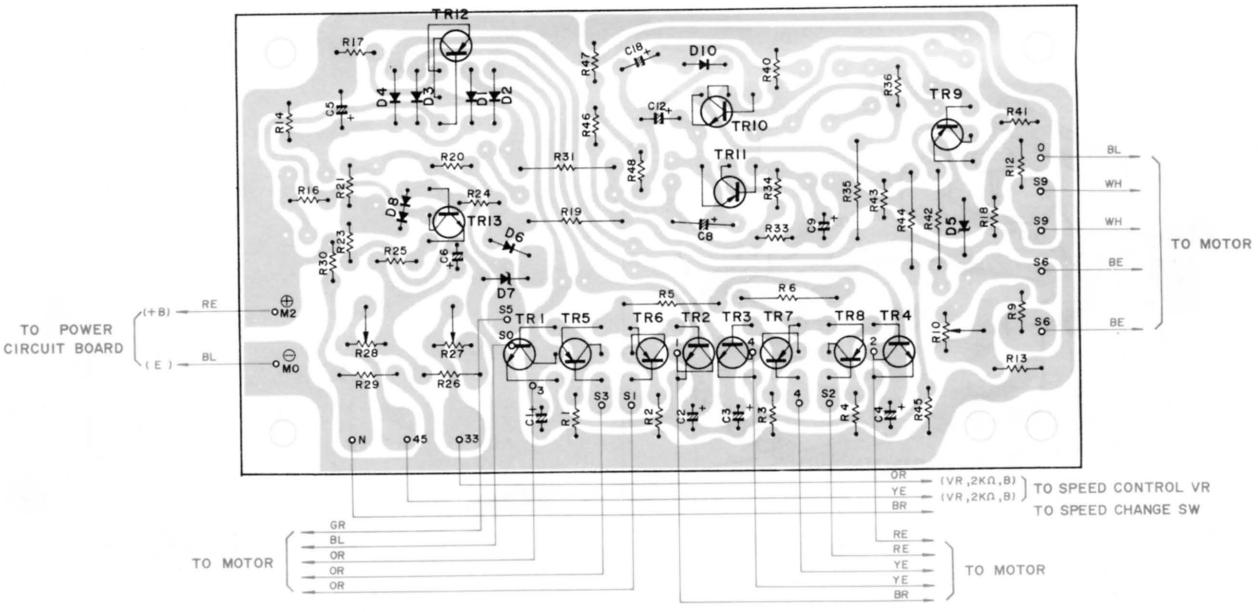

SCHEMATIC DIAGRAM

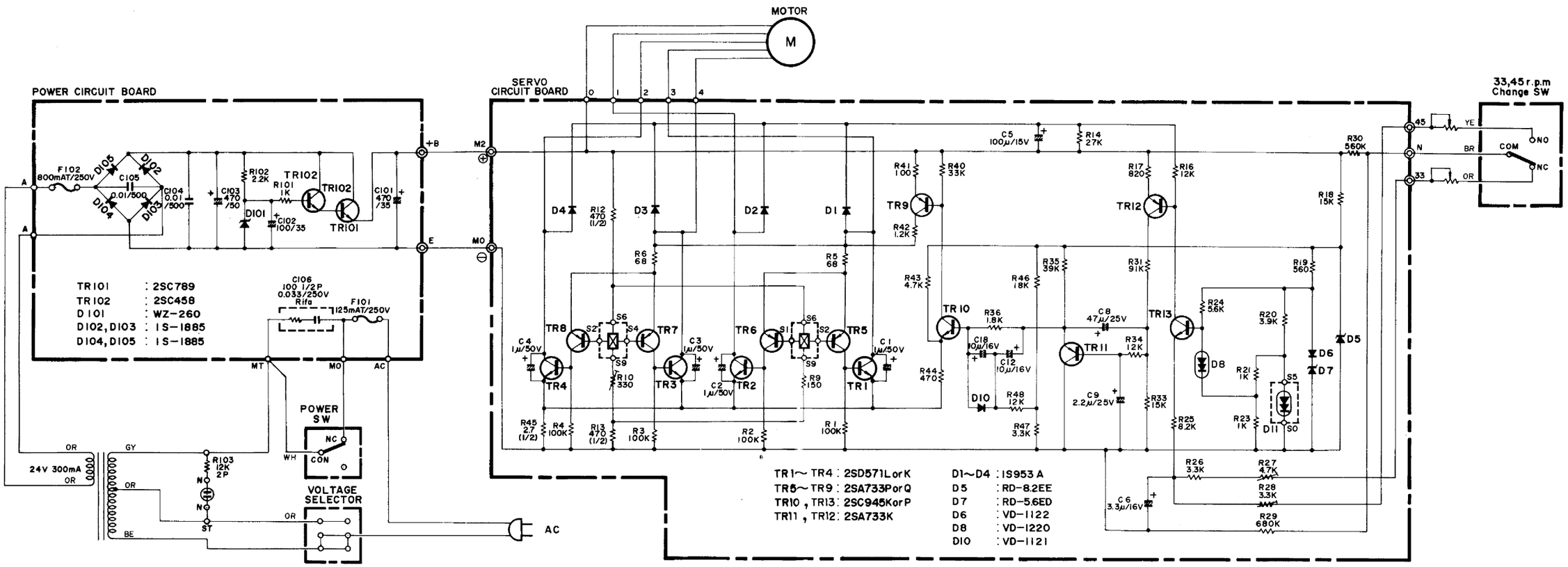

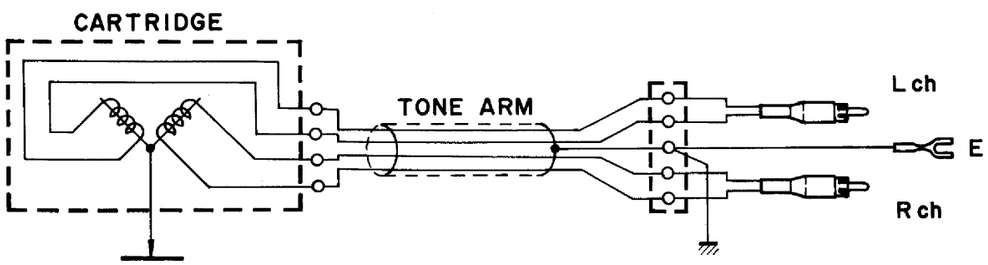

LINE VOLTAGE CONVERSION

▼ U.S. & CANADIAN MODELS

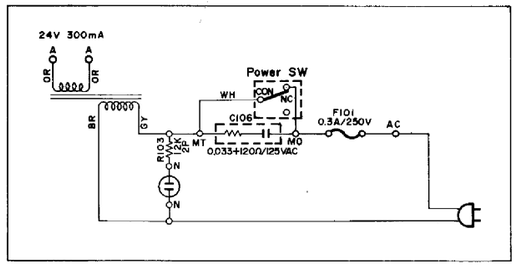

▼ EUROPEAN & BRITISH MODELS

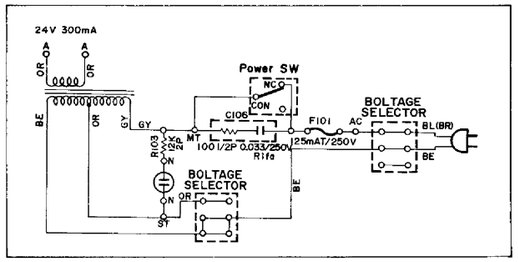

▼ AUSTRALIAN MODEL

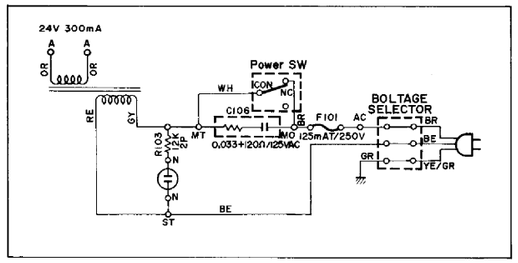

www.hifiengine.com

WIRING

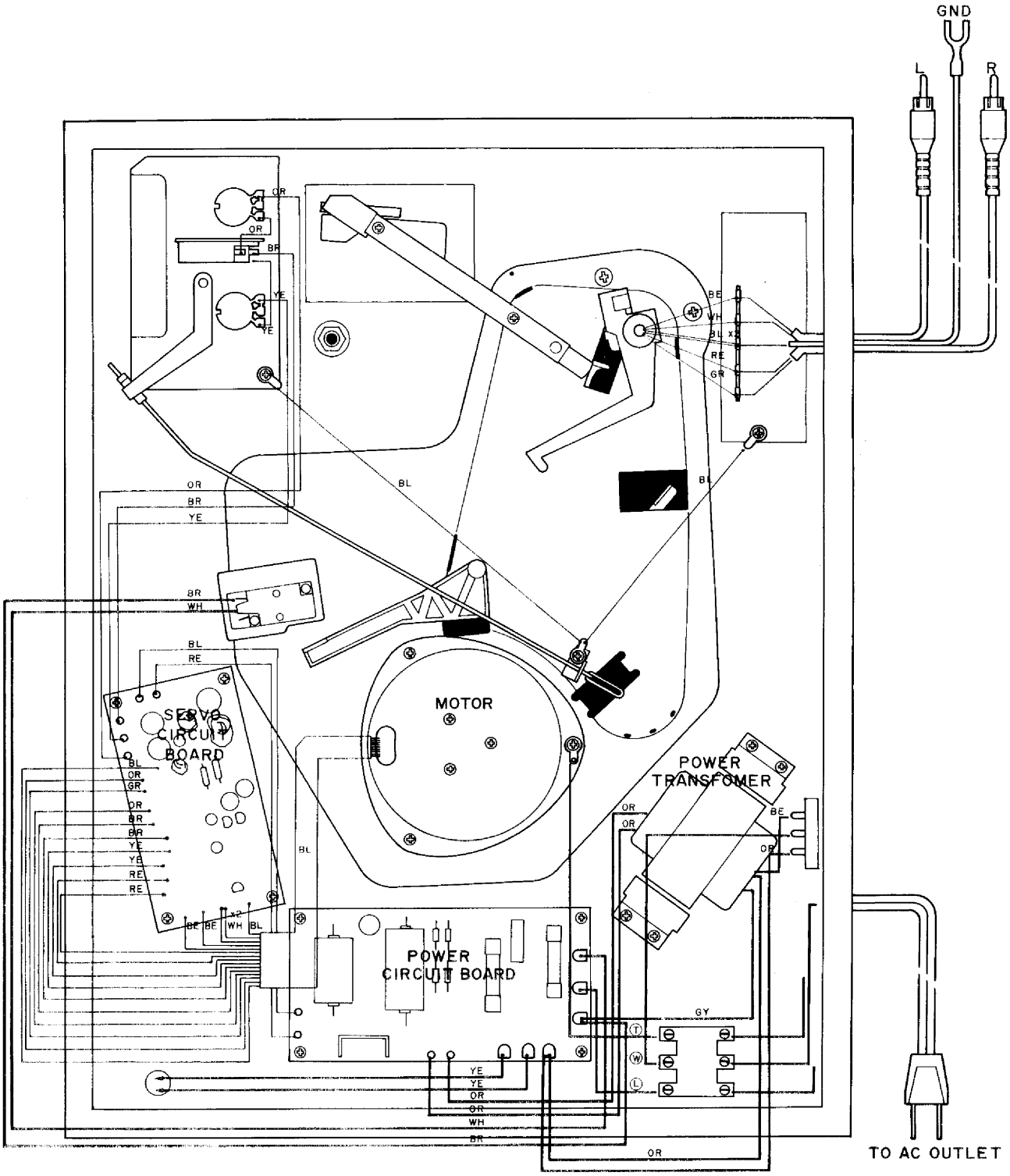
GND
L
R
MOTOR
SERVO CIRCUIT BOARD
POWER TRANSFOMER
POWER CIRCUIT BOARD
TO AC OUTLET

www.hifiengine.com

www.hifiengine.com

PARTS LIST

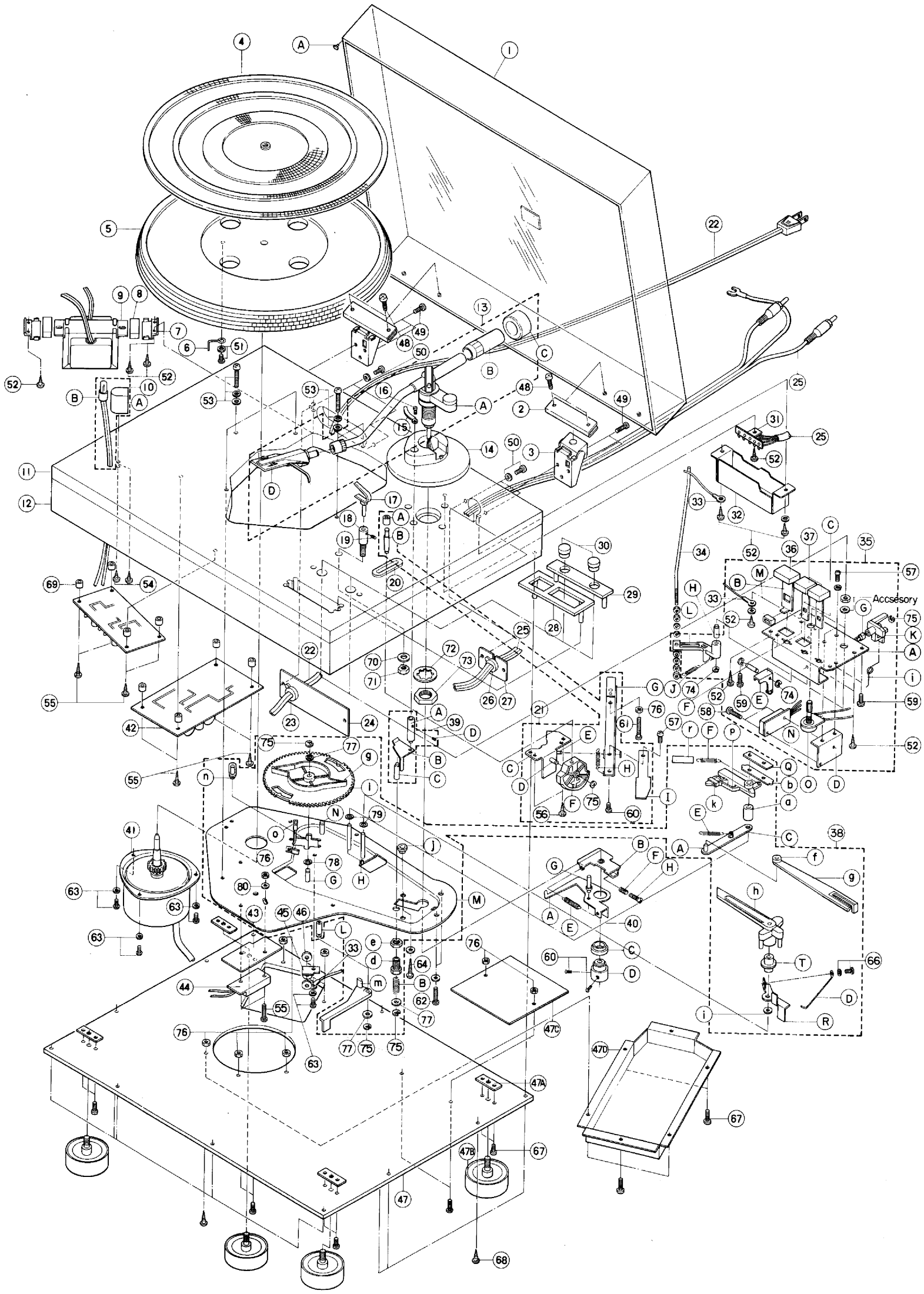

GENERAL MODEL

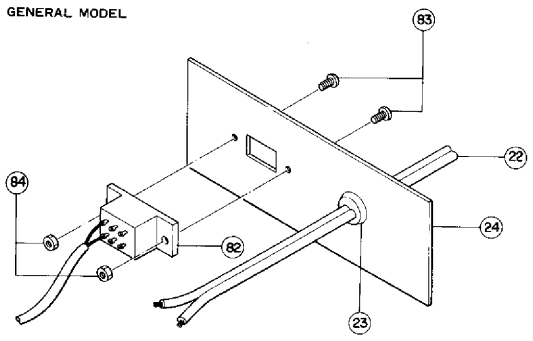

AUSTRALIAN MODEL

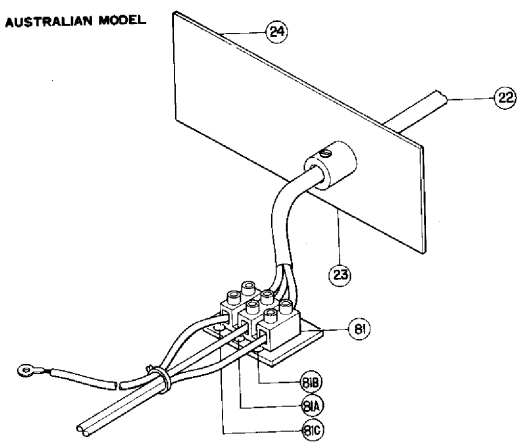

EUROPEAN & B.S MODEL

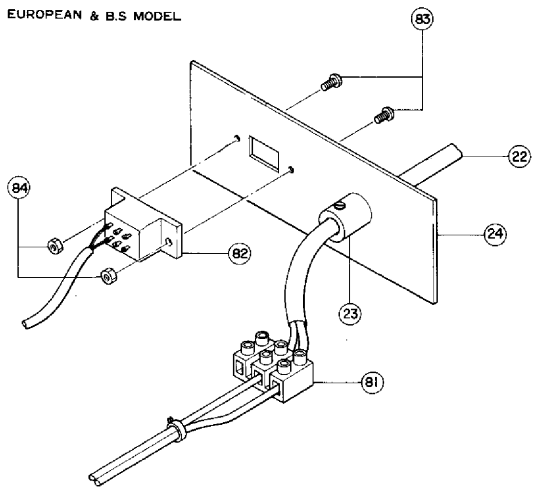

Ref. No.	Part No.	Description		Remarks	Common Models	
1	32 00 00 NB 07 71 90	Dust Cover Ass'y	ダストカバー			
A	32 00 00 CB 07 83 30	Yielding Rubber	ダストカバー用クッションゴム			
2	32 00 00 AA 07 98 50	Lock Plate	ロックプレート			
3	32 00 00 NB 07 32 90	Auto Hinge	オートヒンジ			
4	32 00 00 CB 07 30 50	Rubber Sheet	ゴムシート			
5	32 00 00 BA 06 94 70	Turn Table	ターンテーブル			
6	32 00 00 AA 08 58 00	Pin	ピン			
7	32 00 00 AA 08 40 80	Fixture Metal for Ref. No. 9	トランス固定金具			
8	32 00 00 CB 07 85 80	Cushion for Ref. No. 9	トランスクッション			
9	42 00 00 GA 61 00 10	Power Transformer	電源トランス	UL, CSA		
	42 00 00 GA 61 00 20	—do.—	〃	R, Eu, Bs		
	42 00 00 GA 61 00 80	—do.—	〃	Aust		
10	32 00 00 NB 07 75 80	Strobo Scope Ass'y	ストロボ Ass'y			
A	32 00 00 CB 07 86 50	Case for Lamp	ランプケース			
B	42 00 00 JB 00 04 60	Neon Lamp	ネオンランプ			
11	32 00 92 00 04 45 10	Panel	パネル			
12	32 00 92 90 06 63 80	Cabinet	外装			
13	32 00 00 SS 06 00 90	Tone Arm Unit YA-16	トーンアームユニット			
A	32 00 00 NB 07 75 30	Tone Arm Ass'y	トーンアーム Ass'y			
B	32 00 00 NB 07 26 90	Weight Ass'y	ウエイト Ass'y			
C	32 00 00 BB 06 36 90	Sub Weight	サブウエイト			
D	32 00 00 NB 07 27 00	Head Shell Ass'y	ヘッドシェル Ass'y			
14	32 00 00 BA 07 86 60	Tone Arm Base	アームベース			
15	32 00 00 AA 07 94 80	Elevation Plate	エレベーション板			
16	32 00 00 AA 07 93 90	Fixture Screw	エレベーション板止メネジ			
17	32 00 00 CB 06 20 00	Tone Arm Lest	アームレスト			
18	32 00 00 BA 06 69 00	Lest Stand	レストスタンド			
19	42 00 00 EZ 00 00 70	Hexagonal Set Screw M3 x 3	六角穴付ネジ			
20	32 00 00 CB 07 87 30	Makeup Plate	化粧プレート			
21	32 00 00 NB 07 75 90	Lifter Ass'y	リフター Ass'y			
A	32 00 00 CB 07 86 40	Grip	グリップ			
B	32 00 00 BA 06 94 90	Lever	レバー			
C	32 00 00 AA 08 42 20	Lifter Base	リフターベース			
D	32 00 00 AA 08 42 50	Shaft for Ref. No. 21·F	リフターカムシャフト			
E	32 00 00 AA 08 42 40	Shaft for Ref. No. 21·G	リフターレバーシャフト			
F	32 00 00 CB 07 86 30	Lifter Cam	リフターカム			
G	32 00 00 AA 08 42 30	Lifter Lever	リフターレバー			
H	32 00 00 AA 08 42 70	Spring	リフターレバーバネ			
I	32 00 00 AA 08 42 60	Lifter Plate	リフタープレート			
22	42 00 00 MG 00 03 40	A. C. Cord	A. C. コード	UL, CSA, R		
	42 00 00 MG 00 02 90	—do.—	〃	Eu		
	42 00 00 MG 00 05 00	—do.—	〃	Aust		
	32 00 00 MZ 06 78 40	—do.—	〃	Bs		
23	42 00 00 CB 06 86 30	Cord Stopper	A.C.コードストッパー	UL, CSA, R		
	42 00 00 CB 07 06 90	—do.—	〃	Aust, Eu, Bs		
24	32 00 00 AA 08 26 20	Rear Panel	リアパネル	UL, CSA		
	32 00 00 AA 08 26 40	—do.—	〃	R		
	32 00 00 AA 08 26 30	—do.—	〃	Eu, Bs		
	32 00 00 AA 08 42 80	—do.—	〃	Aust		

www.hifiengine.com

Ref. No.	Part No.	Description		Remarks	Common Models	
25	42 00 00 MI 06 62 20	Pick-up Cord	ピックアップコード			
26	42 00 00 CB 07 27 50	P. U. Cord Stopper	P.U.コードストッパー			
27	32 00 00 AA 08 26 60	Mounting Metal for Ref. No. 25	P.U. コード取付金具			
28	32 00 00 CB 07 87 20	Switch Plate	スイッチプレート			
29	32 00 00 CB 07 85 70	Volume Plate	ボリュームプレート			
30	32 00 00 CB 07 03 50	Speed Control Knob	スピード調整ツマミ			
31	42 00 00 LA 00 01 20	Lug Terminal	ラグ板			
32	32 00 00 AA 07 95 30	Sealed Cover	シールドカバー			
33	42 00 00 LA 00 02 90	Earth Lug	アースラグ			
34	32 00 00 BA 06 94 60	Rod	ロード			
35	32 00 00 NB 07 76 30	Switch Ass'y	スイッチ Ass'y			
A	32 00 00 AA 08 43 00	Switch Base	スイッチベース			
B	32 00 00 AA 08 43 10	Blade Play & Cut	プレイカットブレード			
C	32 00 00 AA 08 43 20	Blade Speed Selector	スピード切換ブレード			
D	32 00 00 AA 08 43 30	Fixture Metal for Ref. No. 35-N	マイクロスイッチ取付金具			
E	32 00 00 AA 08 44 20	Lever	レバー			
F	32 00 00 AA 08 43 40	Shaft for Ref. No. 35-E	レバーシャフト			
G	32 00 00 AA 08 43 50	Shaft for Ref. No. 35-K	スピード切換シャフト			
H	32 00 00 AA 08 43 60	Shaft for Ref. No. 35-L	押エアームシャフト			
I	32 00 00 AA 08 43 70	Click for Ref. No. 35-E	レバークリック			
J	32 00 00 AA 08 43 80	Spring for Ref. No. 35-L	押エアームバネ			
K	32 00 00 CB 07 86 80	Speed Change Bar	スピード切換バー			
L	32 00 00 CB 07 86 90	Arm Holder	押エアーム			
M	32 00 00 CB 07 87 00	Cushion Rubber	クッションゴム			
N	42 00 00 KA 60 00 70	Micro Switch	マイクロスイッチ			
O	42 00 00 HS 41 04 60	Volume	ボリューム			
36	32 00 00 CB 07 87 60	Buttom, Play & Cut	プレイ, カットボタン			
37	32 00 00 CB 07 06 20	—do.— Speed Selector	スピード切換ボタン			
38	32 00 00 NB 07 75 60	Automatic Mechanism Panel Ass'y	オートメカパネル Ass'y			
A	32 00 00 AA 06 38 10	Pin	ピン			
B	32 00 00 AA 08 42 00	Elevation Spring	エレベーションスプリング			
C	32 00 00 AA 07 80 20	Slide Base Holder	スライドベース押エ			
D	32 00 00 AA 07 80 80	Bar	バー			
E	32 00 00 AA 07 81 00	Slide Base Spring	スライドベースバネ			
F	32 00 00 AA 07 81 10	Spring for Ref. No. 38-p	ストッププレードバネ			
G	32 00 00 AA 08 41 80	Shaft for Ref. No. 38-l	メインギヤシャフト			
H	32 00 00 AA 06 37 80	Shaft	シャフト			
L	32 00 00 AA 07 80 90	Shaft for Ref. No. 38-m	スイッチレバー軸受シャフト			
M	32 00 00 AA 08 41 90	Panel, Automatic Mechanism	オートメカパネル			
N	32 00 00 AA 08 42 10	Pin	スプリング固定ピン			
Q	32 00 00 BA 06 07 90	Retainer	リティナー			
R	32 00 00 BA 06 94 80	Stopper B	ストッパーB			
T	32 00 00 BB 06 07 00	Pivot	軸受			
a	32 00 00 BB 06 07 30	—do.—	〃			
b	32 00 00 BB 06 09 30	Lock Plate	ロックプレート			
d	32 00 00 BB 06 06 70	Pivot for Ref. No. 39-B	リフトプレート軸受			
e	42 00 00 BB 06 06 80	Nut	ナット			
f	32 00 00 BB 06 39 10	Pivot for Ref. No. 38-g	スライドベース軸受			
g	32 00 00 CB 07 86 10	Slide Base	スライドベース			

www.hifiengine.com

Ref. No.	Part No.	Description		Remarks	Common Models	
h	32 00 00 CB 06 17 60	Stopper A	ストッパーA			
i	32 00 00 CB 06 18 10	Washer	油止メワッシヤー			
j	32 00 00 CB 06 22 40	Bushing for Ref. No. 39-B	リフトプレートブッシング			
k	32 00 00 CB 06 43 40	Cushion Rubber for Ref. No. 38-Q	クッションゴム			
l	32 00 00 CB 07 14 10	Main Gear	メインギヤ			
m	32 00 00 CB 07 86 20	Switch Lever	スイッチレバー			
n	32 00 00 CB 07 19 30	Guide for Ref. No. 34	ロッドガイド			
o	32 00 00 CB 07 19 40	Cushion Rubber	クッションゴム			
p	32 00 00 CB 07 19 50	Stop Plate	ストッププレート			
q	32 00 00 CB 07 20 90	Spacer	スペーサー			
r		Vinyl Tube φ5 l = 27 ± 1 mm	ビニールチューブ			
39	32 00 00 NB 07 75 50	Lift Plate Ass'y	リフトプレートAss'y			
A	32 00 00 BB 06 49 50	Elevation Shaft	エレベーションシャフト			
B	32 00 00 AA 08 41 70	Lift Plate	リフトプレート			
C	32 00 00 AA 07 94 00	Elevation Shaft C	エレベーションシャフト			
D	42 00 00 EZ 00 00 70	Hexagonal Set Screw M3 x 3	六角穴付ネジ			
40	32 00 00 NB 07 75 40	Cross Arm Ass'y	回転アームAss'y			
A	32 00 00 BA 06 95 00	Cross Arm	回転アーム			
B	32 00 00 AA 08 41 40	Adjusting Plate for Ref. No. 40-A	回転アーム調整板			
C	32 00 00 BB 06 49 70	Pivot for Ref. No. 40-A	回転アーム軸受			
D	32 00 00 BB 06 49 80	Pivot	軸受			
E	32 00 00 AA 08 41 50	Spring	スプリング			
F	32 00 00 AA 08 41 60	Spring for Ref. No. 40-H	回転アーム調整ネジバネ			
G	32 00 00 BB 06 20 50	Pin	ピン			
H	42 00 00 BB 06 53 10	Adjusting Screw for Ref. No. 40-A	回転アーム調整ネジ			
41	42 00 00 JC 00 02 40	D-D Motor	ダイレクトドライブモーター			
42	32 00 00 NA 06 86 70	Power Supply C.B	電源シート	UL, CSA		
	32 00 00 NA 06 86 80	—do.—	〃	R		
	32 00 00 NA 06 86 90	—do.—	〃	Aust, Eu, Bs		
43	32 00 00 CB 07 73 00	Isolation Plate	絶縁板	CSA, R		
	32 00 00 CB 07 91 90	—do.—	〃	UL		
	32 00 00 CB 07 98 40	—do.—	〃	Aust, Eu, Bs		
44	42 00 00 KA 60 02 00	Micro Switch	マイクロスイッチ	UL, CSA, R		
	42 00 00 KA 60 02 20	—do.—	〃	Aust, Eu, Bs		
45	32 00 00 AA 08 55 40	Support for Ref. No. 34	ロッド支エ			
46	32 00 00 CB 06 43 60	Rubber Bush	ゴムブッシュ			
47	32 00 92 90 06 63 90	Bottom Cover Ass'y	底板Ass'y			
A	32 00 00 AA 08 44 00	Fixture Metal for Ref. No. 47-B	インシュレータ固定金具			
B	32 00 00 NB 07 76 80	Insulator	インシュレーター			
C	32 00 00 BA 07 00 50	Sealed Plate	シールド板			
D	32 00 00 AA 08 43 90	Motor Cover	モーターカバー			
48	42 00 00 ED 03 00 80	Binding Head Screw M3 x 8 FCrM3-3g	バインド小ネジ			
49	42 00 00 EQ 03 11 60	Round Wooden Screw M3.1 x 16 FCrM3-3g	鉄丸木ネジ			
50	42 00 00 EH 43 00 80	Cums Head Screw M3 x 8 ZMC2-Bl	カムス小ネジ			
51	42 00 00 EH 04 00 60	Cums Head Screw M4 x 6 ZMC2-Y	カムス小ネジ			
52	42 00 00 EQ 03 11 30	Round Head Wooden Screw M3.1 x 13 ZMC2-Y	鉄丸木ネジ			
53	42 00 00 EH 04 02 50	Cums Head Screw M4 x 25 ZMC2-Y	カムスナベ小ネジ			
54	42 00 00 EJ 02 61 60	Pan Head Tapping Screw M2.6 x 16	ナベタッピングネジ			
55	42 00 00 EQ 03 12 00	Round Head Wooden Screw M3.1 x 20 ZMC2-Y	鉄丸木ネジ			

www.hifiengine.com

Ref. No.	Part No.	Description				Remarks	Common Models	
56	42 00 00 EQ 03 11 00	Round Head Wooden Screw	M3.1 x 10	ZMC2-Y	鉄丸木ネジ			
57	42 00 00 EA 03 00 60	Pan Head Screw	M3 x 6	ZMC2-Y	ナベ小ネジ			
58	42 00 00 EA 03 01 60	—do.—	M3 x 16	ZMC2-Y	〃			
59	42 00 00 Ei 02 61 00	Bind Tapping Screw	M2.6 x 10	ZMC2-Y	バインドタッピングネジ			
60	42 00 00 EA 03 00 80	Pan Head Screw	M3 x 8	ZMC2-Y	ナベ小ネジ			
61	42 00 00 EA 03 02 00	—do.—	M3 x 20	ZMC2-Y	〃			
62	42 00 00 Ei 04 02 00	Bind Tapping Screw	M4 x 20	ZMC2-Y	バインドタッピングネジ			
63	42 00 00 EH 03 00 80	Cums Head Screw	M3 x 8	ZMC2-Y	カムス小ネジ			
64	42 00 00 Ei 04 02 50	Bind Tapping Screw	M4 x 25	ZMC2-Y	バインドタッピングネジ			
65	42 00 00 EA 03 01 80	Pan Head Screw	M3 x 18	ZMC2-Y	ナベ小ネジ			
66	42 00 00 EH 02 60 50	Cums Head Screw	M2.6 x 5	ZMC2-Y	カムス小ネジ			
67	42 00 00 ED 43 01 00	Binding Head Screw	M3 x 10	ZMC2-BI	バインド小ネジ			
68	42 00 00 EQ 03 11 60	Round Head Wooden Screw	M3.1 x 16	ZMC2-Y	鉄丸木ネジ			
69	32 00 00 CB 01 09 80	Spacer			スペーサー			
70	42 00 00 EV 41 00 60	Teethed Washer	A6S		歯付座金			
71	42 00 00 EV 10 00 60	Hexagonal Nut	M6 x 0.75		六角ナット			
72	42 00 00 EV 41 01 60	Teethed Washer	A16S		歯付座金			
73	42 00 00 BB 06 47 20	Hexagonal Nut			六角ナット			
74	42 00 00 EV 50 02 00	E. Ring	φ2	ZMC2-Y	Eリング			
75	42 00 00 EV 50 03 00	—do.—	φ3	ZMC2-Y	〃			
76	42 00 00 EV 10 03 00	Hexagonal Nut	M3	ZMC2-Y	六角ナット			
77	42 00 00 EV 20 04 00	Plain Washer	φ4	ZMC2-Y	平座金			
78	42 00 00 CA 06 02 30	Press Pan Washer			プレスパンワッシャー			
79	42 00 00 CA 06 02 40	—do.—			〃			
80	42 00 00 EV 20 03 00	Plain Washer	φ3	ZMC2-Y	平座金			
81	42 00 00 LA 00 10 40	Connection Terminal	3P		ボイボ端子			
A	42 00 00 CA 06 06 70	Neutral Mark			中立線マーク			
B	42 00 00 CA 06 06 80	Line —do.—			充電線マーク			
C	42 00 00 CA 06 06 90	Earth —do.—			アースマーク			
82	42 00 00 KA 40 03 50	Voltage Selector			電圧切換器			
	32 00 00 CB 07 78 50	Stopper			ストッパー			
83	42 00 00 EA 43 00 80	Pan Head Screw	M3 x 8	ZMC2-BI	ナベ小ネジ			
84	42 00 00 EV 10 03 00	Hexagonal Nut	M3	ZMC2-Y	六角ナット			

www.hifiengine.com

Ref. No.	Part No.	Description				Remarks	Common Models	
	32 00 00 NA 06 86 70	Power Supply C.B			電源シート	UL, CSA		
	32 00 00 NA 06 86 80	—do.—			〃	R		
	32 00 00 NA 06 86 90	—do.—			〃	Aust, Eu, Bs		
	42 00 00 FJ 15 81 00	Electrolytic Cap.	V. Type	100/35	電解コンデンサタテ型			
	42 00 00 FK 45 84 70	Electrolytic Cap.	H. Type	470/35	電解コンデンサヨコ型			
	42 00 00 FK 46 84 70	—do.—		470/50	〃			
	42 00 00 FZ 00 01 10	Spark Killer Cap.		0.033 + 120Ω	スパークキラーコン	UL, CSA		
	42 00 00 FZ 00 02 60	—do.—	Rifa	0.033/AC250V	〃	R, Aust, Eu, Bs		
	42 00 00 HG 10 51 00	Carbon Resistor		1/2P 100Ω	カーボン抵抗			
	42 00 00 HL 62 71 20	Metal Oxide Film Resistor		2P 12K	酸金抵抗			
	42 00 00 iC 04 58 30	Transistor		2SC458 C	トランジスタ			
	42 00 00 iC 07 89 00	—do.—		2SC789 O, Y	〃			
	42 00 00 iF 00 02 40	Diode		1S1885	ダイオード			
	42 00 00 iH 00 02 50	Zener Diode		WZ-260	ツェナーダイオード			
	42 00 00 KB 00 10 00	Fuse	UL. Type	0.3A/250V	ヒューズ	UL, CSA		
	42 00 00 KB 00 03 00	—do.—		0.3AT/250V	〃	R		
	42 00 00 KB 00 13 50	—do.—	Time Lug	125MAT/250V	〃	Aust, Eu, Bs		
	42 00 00 KB 00 10 20	—do.—	UL. Type	1.0A/250V	〃	UL, CSA		
	42 00 00 KB 00 03 30	—do.—		1.0AT/250V	〃	R		
	42 00 00 KB 00 07 20	—do.—	Time Lug	800MAT/250V	〃	Aust, Eu, Bs		
	42 00 00 BA 06 94 50	Heat Sink			放熱板			

www.hifiengine.com